GOVERNMENT OF INDIA
MINISTRY OF FINANCE
(DEPARTMENT OF REVENUE)
CENTRAL BOARD OF DIRECT TAXES

DEDUCTION OF TAX AT SOURCE-
INCOME-TAX DEDUCTION FROM SALARIES
UNDER SECTION 192 OF THE INCOME-TAX ACT, 1961

DURING THE FINANCIAL YEAR 2020-21

CIRCULAR NO. 20 /2020

NEW DELHI, the 03rd December, 2020

worksaccounts.com

Index

Para No.		Page No.
1.	General	1
2.	RATES OF INCOME-TAX AS PER FINANCE ACT, 2020	1
	2.1 Rates of tax	1
	2.2Concessional Rates of Tax u/s 115BAC	2
	2.3 Surcharge of Income tax	3
	2.4 Health and Education Cess	4
3	BROAD SCHEME OF TAX DEDUCTION AT SOURCE FROM SALARIES	4
	3.1 Method of Tax Calculation	4
	3.2 Payment of Tax on Perquisites by Employer	4
	3.2.1 Computation of Average Income Tax	4
	3.2.2 Illustration	5
	3.3 Salary From More Than One Employer	5
	3.4 Relief When Salary Paid in Arrear or Advance	5
	3.5 Information regarding Income under any Other head	6
	3.6 Computation of Income under the head —"Income from house Property"	6
	3.7 Adjustment for Excess or Shortfall of Deduction	7
	3.8 Salary Paid in Foreign Currency	7
4	PERSONS RESPONSIBLE FOR DEDUCTING TAX AND THEIR DUTIES	8
	4.1 Stipulation of section 204 of the Act	8
	4.1.1 Tax determined to be deducted from Salary u/s 192	8
	4.2 Deduction of Tax at Lower Rate	8
	4.3 Deposit of Tax Deducted	8
	4.4.1 Due dates for payment of TDS	8
	4.4.2 Mode of payment of TDS	9
	4.4.2.1 Compulsory filing of Statement by PAO, Treasury Officer, etc. in case of payment of TDS by Book Entry u/s 200 (2A)	9
	4.4.2.2 Payment by an Income Tax Challan	9
	4.5 Interest, Fee, Penalty& Prosecution for Failure to Deposit Tax Deducted	10
	4.6 Furnishing of Certificate for Tax Deducted (Section 203)	10
	4.7 Mandatory Quoting of Permanent Account Number or Aadhaar number, as the case may be, and TAN	13
	4.8 Compulsory Requirement to furnish PAN by employee or Aadhaar number, as the case may be, by employee (Section206AA)	14
	4.9 Statement of Deduction of tax under of section 200 (3) [Quarterly Statement of TDS]	14
	4.10 TDS on Income from Pension	16
	4.11 Matters pertaining to the TDS made in case of Non Resident	16
5	COMPUTATION OF INCOME UNDER THE HEAD –"SALARIES"	16
	5.1 Income chargeable under the head –"Salaries"	16
	5.2 Definition of –"Salary", –"perquisite" and –"profit in lieu of salary" (Section 17)	17
	5.3 Income not included under the Head –"Salaries" (Exemptions)	25

worksaccounts.com

	5.4 Deduction u/s 16 of the Act	31
	5.5 Deductions under Chapter VI-A of the Act	32
6	REBATE OF RS.12500 FOR INDIVIDUAL HAVING TOTAL INCOME UPTO RS. 5 LAKH (SECTON 87A)	46
7	TDS ON PAYMENT OF ACCUMULATD BALANCE UNDER RECOGNISED PROVIDENT FUND AND CONTIBUTION FROM APPROVED SUPERANNUATION FUND.	46
8	DDOs TO OBTAIN EVIDENCE /PROOF OF CLAIMS	47
9	CALCULATION OF INCOME-TAX TO BE DEDUCTED	47
10	MISCELLANEOUS	48

ANNEXURE

I	SOME ILLUTRATIONS	50-62
II	FORM NO 12BA	63-64
IIA	FORM NO 12BB	65-66
III	PROCEDURE OF PREPARATION AND FURNISHING FORM 24G AT TIN-FACILITATION CENTRES (TIN-FCs)	67-68
IV	THE PROCEDURE OF FURNISHING FORM 24G	69-75
V	PERSON RESPONSIBLE FOR FILING FORM 24G IN CASE OF STATE GOVT DEPARTMENTS/CENTRAL GOVT DEPARTMENTS	76
VI	PROCEDURE OF PREPARATION OF QUARTERLY STATEMENT OF DEDUCTION OF TAX u/s 200 (3)	77-79
VII	DEPTT. OF ECO. AFFAIRS NOTIFICATION DATED 22.12.2013	80
VIII	BOARD'S NOTIFICATION DATED 24.11.2000	81-82
IX	BOARD'S NOTIFICATION DATED 29.01.2001	83
X	FORM NO. 10 BA	84

worksaccounts.com

CIRCULAR NO : 20 /2020

F.No. 275/192/2020-IT(B)
Government of India
Ministry of Finance
Department of Revenue
Central Board of Direct Taxes
******

North Block, New Delhi
Dated the 3rd December 2020

SUBJECT: INCOME-TAX DEDUCTION FROM SALARIES DURING THE FINANCIAL YEAR 2020-21 UNDER SECTION 192 OF THE INCOME-TAX ACT, 1961.

*****

Reference is invited to Circular No. 4/2020 dated 16.01.2020 whereby the rates of deduction of income-tax from the payment of income under the head "Salaries" under Section 192 of the Income-tax Act, 1961 (hereinafter 'the Act'), during the financial year 2019-20, were intimated. The present Circular contains the rates of deduction of income-tax from the payment of income chargeable under the head "Salaries" during the financial year 2020-21 and explains certain related provisions of the Act and Income-tax Rules, 1962 (hereinafter the Rules).All the sections and rules referred are of Income-tax Act, 1961 and Income-tax Rules, 1962 respectively unless otherwise specified. The relevant Acts, Rules, Forms and Notifications are available at the website of the Income Tax Department- ***www.incometaxindia.gov.in.***

2. RATES OF INCOME-TAX AS PER FINANCE ACT, 2020:

As per the Finance Act, 2020, income-tax is required to be deducted under Section 192 of the Act from income chargeable under the head "Salaries" for the financial year 2020-21 (i.e. Assessment Year 2021-22) at the following rates:

2.1 Rates of tax

A. Normal Rates of tax:

Sl No	Total Income	Rate of tax
1	Where the total income does not exceed Rs. 2,50,000/-.	Nil
2	Where the total income exceeds Rs. 2,50,000/- but does not exceed Rs. 5,00,000/-.	5 per cent of the amount by which the total income exceeds Rs. 2,50,000/-
3	Where the total income exceeds Rs. 5,00,000/- but does not exceed Rs. 10,00,000/-.	Rs. 12,500/- plus 20 per cent of the amount by which the total income exceeds Rs. 5,00,000/-.
4	Where the total income exceeds Rs. 10,00,000/-.	Rs. 1,12,500/- plus 30 per cent of the amount by which the total income exceeds Rs. 10,00,000/-

worksaccounts.com

B. Rates of tax for every individual, being a resident in India, who is of the age of sixty years or more but less than eighty years at any time during the financial year:

Sl No	Total Income	Rate of tax
1	Where the total income does not exceed Rs. 3,00,000/-	Nil
2	Where the total income exceeds Rs. 3,00,000 but does not exceed Rs. 5,00,000/-	5 per cent of the amount by which the total income exceeds Rs. 3,00,000/-
3	Where the total income exceeds Rs. 5,00,000/- but does not exceed Rs. 10,00,000/-	Rs. 10,000/- plus 20 per cent of the amount by which the total income exceeds Rs. 5,00,000/-.
4	Where the total income exceeds Rs. 10,00,000/-	Rs. 1,10,000/- plus 30 per cent of the amount by which the total income exceeds Rs. 10,00,000/-

C. In case of every individual, being a resident in India, who is of the age of eighty years or more at any time during the financial year:

Sl No	Total Income	Rate of tax
1	Where the total income does not exceed Rs. 5,00,000/-	Nil
2	Where the total income exceeds Rs. 5,00,000 but does not exceed Rs. 10,00,000/-	20 per cent of the amount by which the total income exceeds Rs. 5,00,000/-
4	Where the total income exceeds Rs. 10,00,000/-	Rs. 1,00,000/- plus 30 per cent of the amount by which the total income exceeds Rs. 10,00,000/-

2.2 Concessional Rates of Tax u/s 115BAC

Section 115BAC of the Income -tax Act, 1961, inserted by the Finance Act, 2020 w.e.f. Assessment Year 2021-22, *inter alia*, provides that a person, being an individual or a HUF may exercise option in respect of a previous year to be taxed under the said section 115BAC. In case of a person having income from business or profession, such person is required to exercise the option in prescribed manner on or before the due date specified under sub-section (1) of section 139 of the Act for any previous year relevant to assessment year commencing on or after 01.04.2021 and such option once exercised shall apply to subsequent assessment years. However, in case of such persons, the option once exercised can be withdrawn only once and such person shall never be eligible to exercise the option again unless such person ceases to have income from business or profession. In case of person having income from any other source apart from business and profession, such person is required to exercise the option in the prescribed manner along with the return of income to be furnished under section 139(1) of the Act for the previous year relevant to the assessment year. The concessional rates of tax provided under section 115BAC are subject to the condition that the total income shall be computed without specified exemptions or deductions, set off of loss and additional depreciation. The concessional rates of tax u/s 115BAC are given in table below:

Sl. No.	Total Income	Rate of tax
1	Up to Rs. 2,50,000	Nil
2	From Rs. 2,50,001 to Rs. 5,00,000	5 per cent
3	. From Rs. 5,00,001 to Rs. 7,50,000	10 per cent
4	From Rs. 7,50,001 to Rs. 10,00,000	15 per cent
5	From Rs. 10,00,001 to Rs. 12,50,000	20 per cent

worksaccounts.com

6	From Rs. 12,50,001 to Rs. 15,00,000	25 per cent
7	Above Rs. 15,00,000	30 percent

2.3 Surcharge on Income tax:

The amount of income-tax computed in accordance with the preceding provisions of this Paragraph, or the provisions of section 111A or section 112 or section 112A or the provisions of section 115BAC, of the Income-tax Act, shall be increased by a surcharge for the purposes of the Union, calculated, in the case of every individual or Hindu undivided family or association of persons or body of individuals, whether incorporated or not, or every artificial juridical person referred to in sub-clause (vii) of clause (31) of section 2 of the Income-tax Act,—

(a) having a total income (including the income by way of dividend or income under the provisions of section 111A and section 112A of the Income-tax Act) exceeding fifty lakh rupees but not exceeding one crore rupees, at the rate of ten per cent. of such income-tax;

(b) having a total income (including the income by way of dividend or income under the provisions of section 111A and section 112A of the Income-tax Act) exceeding one crore rupees but not exceeding two crore rupees, at the rate of fifteen per cent. of such income-tax;

(c) having a total income (excluding the income by way of dividend or income under the provisions of section 111A and section 112A of the Income-tax Act) exceeding two crore rupees but not exceeding five crore rupees, at the rate of twenty-five per cent. of such income-tax;

(d) having a total income (excluding the income by way of dividend or income under the provisions of section 111A and section 112A of the Income-tax Act) exceeding five crore rupees, at the rate of thirty-seven per cent. of such income-tax; and

(e) having a total income (including the income by way of dividend or income under the provisions of section 111A and section 112A) exceeding two crore rupees, but is not covered under clauses (c) and (d), shall be applicable at the rate of fifteen per cent. of such income-tax:

Provided that in case where the total income includes any income by way of dividend or income chargeable under section 111A and section 112A of the Income-tax Act, the rate of surcharge on the amount of Income-tax computed in respect of that part of income shall not exceed fifteen per cent.:

Provided further that in the case of persons mentioned above having total income exceeding, —

(a) fifty lakh rupees but not exceeding one crore rupees, the total amount payable as income-tax and surcharge on such income shall not exceed the total amount payable as income-tax on a total income of fifty lakh rupees by more than the amount of income that exceeds fifty lakh rupees;

(b) one crore rupees but does not exceed two crore rupees, the total amount payable as income-tax and surcharge on such income shall not exceed the total amount payable as income-tax and surcharge on a total income of one crore rupees by more than the amount of income that exceeds one crore rupees;

(c) two crore rupees but does not exceed five crore rupees, the total amount payable as income-tax and surcharge on such income shall not exceed the total amount payable as income-tax and surcharge on a total income of two crore rupees by more than the amount of income that exceeds two crore rupees;

worksaccounts.com

(d) five crore rupees, the total amount payable as income-tax and surcharge on such income shall not exceed the total amount payable as income-tax and surcharge on a total income of five crore rupees by more than the amount of income that exceeds five crore rupees.

2.4 Health and Education Cess

"Health and Education Cess" shall be levied at the rate of four percent of income tax including surcharge wherever applicable, No marginal relief shall be available in respect of such cess.

3 SECTION 192 OF THE INCOME-TAX ACT, 1961: BROAD SCHEME OF TAX DEDUCTION AT SOURCE FROM "SALARIES":

3.1 Method of Tax Calculation:

Every person who is responsible for paying any income chargeable under the head "Salaries" shall deduct income-tax on the estimated income of the assessee under the head "Salaries" for the financial year 2020-21. The income-tax is required to be calculated on the basis of the rates given above, subject to the provisions related to requirement to furnish PAN or Aadhaar number, as the case may be, as per sec 206AA of the Act, and shall be deducted at the time of each payment.

As per section 192(1C) of the Act, a person, being an eligible start-up referred to in section 80-IAC, responsible for paying any income to the assessee being perquisite of the nature specified in sub-clause (vi) of clause (2) of Section 17 in any previous year relevant to assessment year 2021-22 and thereafter, shall deduct or pay, as the case may be, tax on such income within 14 days—

a) after the expiry of 48 months from end of relevant assessment year; or
b) from the date of sale of such specified security or sweat equity share by the assessee; or
c) from the date of the assessee ceasing to be the employee of the person,

whichever is the earliest, on the basis of rates in force for the financial year in which the said specified security or sweat equity share is allotted or transferred.

An employee intending to opt for the concessional rates of tax under section 115BAC of the Act, may intimate the deductor, being his employer, of such intention for each previous year and upon such intimation, the deductor shall compute his total income, and make TDS thereon in accordance with the provisions of section 115BAC. If such intimation is not made by the employee, the employer shall make TDS without considering the provision of section 115BAC of the Act. The intimation so made to the deductor shall be only for the purpose of TDS during the previous year and cannot be modified during that year. (CBDT Circular No. C1 of 2020 dated 13.04.2020)

No tax, however, will be required to be deducted at source in a case unless the estimated salary income including the value of perquisites is taxable after giving effect to the exemptions, deductions and relief as applicable. *(Some typical illustrations of computation of tax are given at **Annexure-I**).*

3.2 Payment of Tax on Perquisites by Employer:

An option has been given to the employer to pay the tax on non-monetary perquisites given to an employee. The employer may, at its option, make payment of the tax on such perquisites himself without making any TDS from the salary of the employee. However, the employer will have to pay the tax at the time when such tax was otherwise deductible i.e. at the time of payment of income chargeable under the head "salaries" to the employee.

3.2.1 Computation of Average Income Tax:

For the purpose of making the payment of tax mentioned in para 3.2 above, tax is to be determined at the average of income tax computed on the basis of rate in force for the financial year, on the income chargeable under the head "salaries", including the value

worksaccounts.com

of perquisites for which tax has been paid by the employer himself.

3.2.2 Illustration:

The income chargeable under the head "salaries" of an employee below sixty years of age for the year inclusive of all perquisites is Rs. 6,00,000/-, out of which, Rs. 50,000/- is on account of non-monetary perquisites and the employer opts to pay the tax on such perquisites as per the provisions discussed in para 3.2 above.

STEPS:

Income Chargeable under the head "Salaries" inclusive of all perquisites	Rs. 6,00,000/-
Tax as per normal rates on Total Salary (including Cess)	Rs. 33,800/-
Average Rate of Tax [(33, 800/6,00,000) X 100]	5.63/%
Tax payable on Rs.50,000/= (5.63% of 50,000)	Rs. 2815
Amount required to be deposited each month	Rs. 235= 2815/12

The tax so paid by the employer shall be deemed to be TDS made from the salary of the employee.

3.3 Salary From More Than One Employer:

Section 192(2) deals with situations where an individual is working under more than one employer or has changed from one employer to another. It provides for deduction of tax at source by such employer (as the tax payer may choose) from the aggregate salary of the employee, who is or has been in receipt of salary from more than one employer. The employee is now required to furnish to the present/chosen employer details of the income under the head "Salaries" due or received from the former/other employer and also tax deducted at source therefrom, **in writing and duly verified by him and by the former/other employer**. The present/chosen employer will be required to deduct tax at source on the aggregate amount of salary (including salary received from the former or other employer).

3.4 Relief When Salary Paid in Arrear or Advance:

3.4.1 **Under** section 192(2A) where the assessee, being a Government servant or an employee in a company, co-operative society, local authority, university, institution, association or body is entitled to the relief under **Section 89** he may furnish to the person responsible for making the payment referred to in Para (3.1), such particulars in **Form No. 10E duly verified by him**, and thereupon the person responsible, as aforesaid, shall compute the relief on the basis of such particulars and take the same into account in making the deduction under Para(3.1) above. Further, such assessee shall upload the aforesaid Form 10E electronically in the e-Filing portal along with the return of income.

Here "university" means a university established or incorporated by or under a Central, State or Provincial Act, and includes an institution declared under Section 3 of the University Grants Commission Act, 1956 to be a university for the purpose of that Act.

3.4.2 With effect from 1/04/2010 (AY 2010-11), no such relief shall be granted in respect

worksaccounts.com

of any amount received or receivable by an assessee on his voluntary retirement or termination of his service, in accordance with any scheme or schemes of voluntary retirement or in the case of a public sector company referred to in section 10(10C)(i) (read with Rule 2BA), a scheme of voluntary separation, if an exemption in respect of any amount received or receivable on such voluntary retirement or termination of his service or voluntary separation has been claimed by the assessee under section 10(10C) in respect of such, or any other, assessment year.

3.5 Information regarding Income under any other head:

(i) Section 192(2B) enables a taxpayer to furnish particulars of income under any head other than "Salaries" (not being a loss under any such head other than the loss under the head — Income from house propertyl) received by the taxpayer for the same financial year and of any tax deducted at source thereon. The particulars may now be furnished in a **simple statement**, which is properly signed and verified by the taxpayer in the manner as prescribed under Rule 26B(2) of the Rules and shall be annexed to the simple statement. The form of verification is reproduced as under:

> **I, ... (name of the assessee), do declare that what is stated above is true to the best of my information and belief.**

It is reiterated that the DDO can take into account **any loss only under the head** "Income from house property". Loss under any other head cannot be considered by the DDO for calculating the amount of tax to be deducted.

It may be noted that loss under the head "Income from house property" can be set off only up to Rs. 2.00 lakh with the income under any other head of income in view of the amendment to section 71 of the Act vide Finance Act, 2017. Hence, loss under the head "Income from house property" in excess of Rs. 2.00 lakh is to be ignored for calculating the amount of tax deduction.

3.6 Computation of income under the head " Income from house property":

While taking into account the loss from House Property, the DDO shall ensure that the employee files the declaration referred to above and encloses therewith a computation of such loss from house property. Following details shall be obtained and kept by the employer in respect of loss claimed under the head "Income from house property" separately for each house property:

a) Gross annual rent/value
b) Municipal Taxes paid, if any
c) Deduction claimed for interest paid, if any
d) Other deductions claimed
e) Address of the property

The DDO shall also ensure furnishing of the evidence or particulars in Form No. 12BB in respect of deduction of interest as specified in Rule 26C read with section 192 (2D).

3.6.1 Conditions for Claim of Deduction of Interest on Borrowed Capital for Computation of Income From House Property [Section 24(b)]:

Section 24(b) of the Act allows deduction from income from houses property on interest on borrowed capital as under:-

(i) the deduction is allowed only in case of house property which is owned and is in the

worksaccounts.com

occupation of the employee for his own residence. However, if it is actually not occupied by the employee in view of his place of the employment being at other place, his residence in that other place should not be in a building belonging to him.

(ii) the quantum of deduction allowed as per table below:

Sl No	Purpose of borrowing capital	Date of borrowing capital	Maximum Deduction Allowable
1	Repair or renewal or reconstruction of the house	Any time	Rs. 30,000/-
2	Acquisition or construction of the house	Before 01.04.1999	Rs. 30,000/-
3	Acquisition or construction of the house	On or after 01.04.1999	Rs. 1,50,000/- (upto AY 2014-15)
			Rs. 2,00,000/- (w. e. f. AY 2015-16)
4	Aggregate deduction of Sl. 1 and Sl. 3 of the table above shall not exceed Rs.2,00,000/- from the Financial Year 2019-20.		

In case of Serial No. 3 above

(a) The acquisition or construction of the house should be completed within 5 years from the end of the FY in which the capital was borrowed. Hence, it is necessary for the DDO to have the completion certificate of the house property against which deduction is claimed either from the builder or through self-declaration from the employee.

(b) Further any prior period interest for the FYs upto the FY in which the property was acquired or constructed (as reduced by any part of interest allowed as deduction under any other section of the Act) shall be deducted in equal installments for the FY in question and subsequent four FYs.

(c) The employee has to furnish before the DDO a certificate from the person to whom any interest is payable on the borrowed capital specifying the amount of interest payable. In case a new loan is taken to repay the earlier loan, then the certificate should also show the details of Principal and Interest of the loan so repaid.

As discussed in para 4.6.5 section 192(2D) read with rule 26C makes it mandatory for the DDO to obtain following details/evidences in respect of Interest deductible.

(i) Interest payable or paid
(ii)Name of the lender
(iii) Address of the lender
(iv) PAN or Aadhaar number as the case may be,of the lender
PAN or Aadhaar number as the case may be,of the lender being financial institution or employer, is mandatory if it is available with the employee, however in case of other lender obtaining of PAN or Aadhaar number as the case may be, is mandatory by the DDO.

3.7 Adjustment for Excess or Shortfall of Deduction:

The provisions of Section 192(3) allow the deductor to make adjustments for any excess or shortfall in the deduction of tax already made during the financial year, in subsequent deductions for that employee within that financial year itself.

3.8 Salary Paid in Foreign Currency:

For the purposes of deduction of tax on salary payable in foreign currency, the value in rupees of such salary shall be calculated at the **"Telegraphic transfer buying rate"** of such currency as on the date on which tax is required to be deducted at source (see Rule 26).

worksaccounts.com

4 PERSONS RESPONSIBLE FOR DEDUCTING TAX AND THEIR DUTIES:

4.1 Stipulation of section 204 of the Act:

As per section 204(i) of the Act, in the context of payments other than payments by the Central Government or the State Government the "person responsible for paying" for the purpose of Section 192 means the employer himself or if the employer is a Company, the Company itself including the Principal Officer thereof. Further, as per Section 204(iv), in case the credit, or as the case may be, the payment is made by or on behalf of Central Government or State Government, the DDO or any other person by whatever name called, responsible for crediting, or as the case may be, paying such sum is the "person responsible for paying" for the purpose of Section 192.Furthermore, as per section 204(v), in case of a person not resident in India, the "person responsible for paying" means the person himself or any person authorised by such person or the agent of such person in India including any person treated as an agent under section 163.

4.1.1 Tax determined to be deducted from Salary u/s 192:

The tax determined as per para 9 should be deducted from the salary u/s 192 of the Act.

4.2 Deduction of Tax at Lower Rate:

If the jurisdictional TDS officer of the employer issues a certificate of No Deduction or Lower Deduction of Tax under section 197 of the Act, in response to the application filed before him in Form No 13 by the employee; then the DDO should take into account such certificate and deduct tax on the salary payable at the rates mentioned therein. (**see Rule 28AA).** The Unique Identification Number of the certificate is required to be reported in Quarterly Statement of TDS (Form 24Q).

4.3 Deposit of Tax Deducted:

Rule 30 prescribes time and mode of payment of tax deducted at source to the account of Central Government.

4.4.1 Due dates for payment of TDS:

Prescribed time of payment/deposit of TDS to the credit of Central Government account is as under:

4.4.1.1 In case of an Office of Government:

Sl No.	Description	Time up to which to be deposited.
1	Tax deposited without Challan [Book Entry]	SAME DAY
2	Tax deposited with Challan	7TH DAY NEXT MONTH
3	Tax on perquisites opted to be deposited by the employer.	7TH DAY NEXT MONTH

4.4.1.2 In any case other than an Office of Government

Sl No.	Description	Time up to which to be deposited.
1	Tax deducted in March	30th APRIL NEXT FINANCIAL YEAR
2	Tax deducted in any other month	7TH DAY NEXT MONTH
3	Tax on perquisites opted to be deposited by the employer	7TH DAY NEXT MONTH

However, if a DDO applies before the jurisdictional Additional/Joint Commissioner of Income Tax to permit quarterly payments of TDS under section 192, the Rule 30(3) allows for payments on quarterly basis and as per time given in Table below:

worksaccounts.com

Sl. No.	Quarter of the financial year ended on	Date for quarterly payment
1	30th June	7th July
2	30th September	7th October
3	31st December	7th January
4	31st March	30th April next Financial Year

4.4.2 Mode of Payment of TDS

4.4.2.1 Compulsory filing of Statement by PAO, Treasury Officer, etc in case of payment of TDS by Book Entry u/ s 200 (2A):

In the case of an office of the Government, where tax has been paid to the credit of the Central Government without the production of a challan [**Book Entry**], the Pay and Accounts Officer or the Treasury Officer or the Cheque Drawing and Disbursing Officer or any other person by whatever name called to whom the deductor reports about the tax deducted and who is responsible for crediting such sum to the credit of the Central Government, shall-

(a) submit a statement in Form No. 24G **under section 200 (2A)** on or before the 30th day of April where statement relates to the month of March; and in any other case, on or before 15 days from the end of relevant month to the agency authorized by the Director General of Income-tax (Systems) [TIN Facilitation Centres currently managed by M/s National Securities Depository Ltd] in respect of tax deducted by the deductors and reported to him for that month; and

(b) intimate the number (hereinafter referred to as the Book Identification Number or BIN) generated by the agency to each of the deductors in respect of whom the sum deducted has been credited. BIN consist of receipt number of Form 24G, DDO sequence number in Form No. 24G and date on which tax is deposited.

If the PAO/CDDO/TO etc, as stated above, fails to deliver the statement as required u/s 200(2A), he will be liable to pay, by way of penalty, under section 272A(2)(m), a sum which shall be Rs.100/- for every day during which the failure continues. However, the amount of such penalty shall not exceed the amount of tax which is deductible at source.

The procedure of furnishing Form 24G is detailed in Annexure III. PAOs/DDOs should go through the FAQs in Annexure IV to understand the correct process to be followed. The ZAO / PAO of Central Government Ministries is responsible for filing of Form No. 24G on monthly basis. The person responsible for filing Form No. 24G in case of State Govt. Departments is shown at Annexure V.

The procedure of furnishing Form 24G is detailed in Annexure IV. PAOs/DDOs should go through the FAQs therein to understand the correct process to be followed.

4.4.2.2 Payment by an Income Tax Challan:

(i) In case the payment is made by an income-tax challan, the amount of tax so deducted shall be deposited to the credit of the Central Government by remitting it, within the time specified in Table in para 4.4.1 above, into any office of the Reserve Bank of India or branches of the State Bank of India or of any authorized bank;
(ii) In case of a company and a person (other than a company), to whom provisions of section 44AB are applicable, the amount deducted shall be electronically remitted into the Reserve Bank of India or the State Bank of India or any authorised bank accompanied by an

worksaccounts.com

electronic income-tax challan (Rule125).

The amount shall be *construed as electronically remitted* to the Reserve Bank of India or to the State Bank of India or to any authorized bank, if the amount is remitted by way of:

(a) internet banking facility of the Reserve Bank of India or of the State Bank of India or of any authorized bank; or
(b) debit card. {Rule 30(7)}

4.5 Interest, Penalty & Prosecution for Failure to Deposit Tax Deducted:

4.5.1 If a person fails to deduct the whole or any part of the tax at source, or, after deducting, fails to pay the whole or any part of the tax to the credit of the Central Government within the prescribed time, he shall be liable to action in accordance with the provisions of section 201 and shall be deemed to be an assessee-in-default in respect of such tax and liable for penal action u/s 221 of the Act. Further Section 201(1A) provides that such person shall be liable to pay simple interest

(i) at the rate of 1% for every month or part of the month on the amount of such tax from the date on which such tax was deductible to the date on which such tax is deducted; and

(ii) at the rate of one and one-half percent for every month or part of a month on the amount of such tax from the date on which such tax was deducted to the date on which such tax is actually paid.

Such interest, if chargeable, is mandatory in nature and has to be paid before furnishing of quarterly statement of TDS for respective quarter.

4.5.2 Section 271C inter alia lays down that if any person fails to deduct whole or any part of tax at source or fails to pay the whole or part of tax under the second proviso to section 194B, he shall be liable to pay, by way of penalty, a sum equal to the amount of tax not deducted or paid by him.

4.5.3 Further, section 276B lays down that if a person fails to pay to the credit of the Central Government within the prescribed time, as above, the tax deducted at source by him or tax payable by him under the second proviso to Section 194B, he shall be punishable with rigorous imprisonment for a term which shall be between 3 months and 7 years, along with fine.

It may be noted that as per the Taxation and Other Laws (Relaxation of Certain Provisions) Act, 2020 (No.38 of 2020), in case due date for payment to Central Government after deduction of tax at source falls during the period from 20th, march, 2020 to 29th June, 2020 and such amount has not been paid within such date, but has been paid on or before the 30th June, 2020, the rate of interest on such amount for the period of delay shall be 0.75 % for every month or part thereof. Further, no penalty shall be levied and no prosecution shall be sanctioned in respect of such amount for the period of delay.

4.6 Furnishing of Certificate for Tax Deducted (Section 203):

4.6.1 Section 203 requires the DDO to furnish to the employee a certificate in Form 16 detailing the amount of TDS and certain other particulars. Rule 31 prescribes that Form 16 should be furnished to the employee by 15th June after the end of the financial year in which the income was paid and tax deducted. Even the banks deducting tax at the time of payment of pension are required to issue such certificates. **Through the Taxation and Other Laws**

worksaccounts.com

(Relaxation of Certain Provisions) Act, 2020 (No.38 of 2020), the due date for furnishing Form 16 for F.Y. 2019-20 to the employee has been extended up to 15.08.2020. A copy of Form 16 is enclosed. The certificate in Form 16 shall specify

(a) Valid permanent account number (PAN) or Aadhaar number, as the case may be,of the deductee;

(b) Valid tax deduction and collection account number (TAN) of the deductor;

(c) (i) Book identification number or numbers (BIN) where deposit of tax deducted is without production of challan in case of an office of the Government;

(ii) Challan identification number or numbers (CIN*) in case of payment through bank.

(*Challan identification number (CIN) means the number comprising the Basic Statistical Returns (BSR) Code of the Bank branch where the tax has been deposited, the date on which the tax has been deposited and challan serial number given by the bank.)

(d) Receipt numbers of all the relevant quarterly statements of TDS (24Q). The receipt number of the quarterly statement is of 8 digit.

Further as per Circular 04/2013 dated 17-04-2013 all deductors (including Government deductors who deposit TDS in the Central Government Account through book entry) shall issue the Part A of Form No. 16, by generating and subsequently downloading it through TRACES Portal and after duly authenticating and verifying it, in respect of all sums deducted on or after the 1st day of April, 2012 under the provisions of section 192 of Chapter XVII-B. Part A of Form No 16 shall have a unique TDS certificate number. The deductor shall generate 'Part B (Annexure)' of Form No. 16 from the Traces website and issue to the deductee after due authentication and verification along with the Part A of the Form No. 16.

It may be noted that under the new TDS procedure, TAN of deductee/ PAN or Aadhaar number, as the case may be,of the deductee and receipt number of TDS statement filed by the deductor act as unique identifier for granting online credit of TDS to the decutee. Hence due care should be taken in filling these particulars. Due care should also be taken in indicating correct CIN/ BIN in TDS statement.

If the DDO fails to issue these certificates to the person concerned, as required by section 203, he will be liable to pay, by way of penalty, under section 272A(2)(g), a sum which shall be Rs.100/- for every day during which the failure continues. However, the amount of such penalty shall not exceed the amount of tax which is deductible at source.

It is, however, clarified that there is no obligation to issue the TDS certificate in case tax at source is not deductible/deducted by virtue of claims of exemptions and deductions.

[Note: TRACES is a web-based application of the Income - tax Department that provides an interface to all stakeholders associated with TDS administration. It enables viewing of challan status, downloading of NSDL Conso File, Justification Report and Form 16 / 16A as well as viewing of annual tax credit statements (Form 26AS). Each deductor is required to Register in the Traces portal. Form 16/16A issued to deductees should mandatorily be generated and downloaded from the TRACES portal].

Certain essential points regarding the filing of the Statement and obtaining TDS certificates are mentioned below:

worksaccounts.com

(a) TDS certificate (Form16) would be generated for the deductee only if Valid PAN or Aadhaar number as the case may be,is correctly mentioned in the Annexure II of Form 24Q in Quarter 4 filed by the deductor. Moreover, employers are advised to ensure in Form 16 that the status of "matching" with respect to "Form 24G/OLTAS" is _F'. If the status of matching other than 'F', kindly take necessary action promptly to rectify the same. It is pertinent to mention here that certain facilities have been provided to the deductors at website www.tdscpc.gov.in/ including online correction of statements (Form 24Q).

(b) The employer should quote the **gross amount of salary** (including any amount exempt under section 10 and the deductions under chapter VI A) in column 321 (Amount paid/credited) of Annexure I of Form 24Q as per NSDL RPU (hereafter Return Preparation Utility).

(c) The employer should quote the amount of salary excluding any amount exempt under section 10 in column 333 (Total amount of salary) of Annexure II of Form 24Q as per NSDL RPU.

(d) TDS on Income (including loss from House Property) under any Head other than the head "Salaries" offered for TDS (shown in column 339) can be shown in column 350 (Reported amount of TDS by previous employer, as per NSDL RPU.

(e) Employer is advised to quote Total Taxable Income (Column 346) in Annexure II without rounding-off and TDS should be deducted and reported accordingly i.e. without rounding-off of TDS also.

Example:

Total Taxable Income	Total Taxable Income (Rounded Off)	TDS to be Deducted #	TDS Deducted/ Reported after rounding-off of income	Short Deduction
Rs.1350094	Rs. 1350090	Rs. 235028.20	Rs 235028	Rs.1.20

Tax liability of the person may not be same in case such person opts for the concessional tax regime under section 115BAC of the Act

4.6.2. If an assessee is employed by more than one employer during the year, each of the employers shall issue Part A of the certificate in Form No. 16 pertaining to the period for which such assessee was employed with each of the employers and Part B may be issued by each of the employers or the last employer at the option of the assessee.

4.6.3. **Authentication by Digital Signatures**:

(i) Where a certificate is to be furnished in Form No. 16, the deductor may, at his option, use **digital signatures** to authenticate such certificates.

(ii) In case of certificates issued under clause (i), the deductor shall ensure that

a) the conditions prescribed in para 4.6.1 above are complied with;

b) once the certificate is digitally signed, the contents of the certificates are not amenable to change; and

c) the certificates have a control number and a log of such certificates is maintained by the deductor.

- The digital signature is being used to authenticate most of the e-transactions on the internet as transmission of information using digital signature is failsafe. It saves time specially in organisations having large number of employees where issuance of certificate of deduction of tax with manual signature is time consuming (Circular no

worksaccounts.com

2 of 2007 dated 21.05.2007)

4.6.4. Furnishing of particulars pertaining to perquisites, etc. (Section 192(2C):

4641 As per section 192(2C), the responsibility of providing correct and complete particulars of perquisites or profits in lieu of salary given to an employee is placed on the person responsible for paying such income i.e., the person responsible for deducting tax at source. The form and manner of such particulars are prescribed in Rule 26A, Form 12BA (Annexure II) and Form 16 of the Rules. Information relating to the nature and value of perquisites is to be provided by the employer in Form 12BA in case salary paid or payable is above Rs.1,50,000/-. In other cases, the information would have to be provided by the employer in Form 16 itself.

4642 An employer, who has paid the tax on perquisites on behalf of the employee as per the provisions discussed in para 3.2 of this circular, shall furnish to the employee concerned, a certificate to the effect that tax has been paid to the Central Government and specify the amount so paid, the rate at which tax has been paid and certain other particulars in the amended Form 16.

4643 The obligation cast on the employer under Section 192(2C) for furnishing a statement showing the value of perquisites provided to the employee is a crucial responsibility of the employer, which is expected to be discharged in accordance with law and rules of valuation framed there under. Any false information, fabricated documentation or suppression of requisite information will entail consequences thereof provided under the law. The certificates in Forms 16 and Form 12BA specified above, shall be furnished to the employee by 15th June of the financial year immediately following the financial year in which the income was paid and taxes deducted. **Through the Taxation and Other Laws (Relaxation of Certain Provisions) Act, 2020 (No.38 of 2020), the due date for furnishing Form 16 for F.Y. 2019-20 to the employee has been extended up to 15.08.2020.**If he fails to issue these certificates to the person concerned, as required by section 192(2C), he will be liable to pay,by way of penalty, under section 272A(2)(i), a sum which shall be Rs.100/- for every day during which the failure continues.

As per Section 139C of the Act, the Assessing Officer can require the taxpayer to produce Form 12BA along with Form 16, as issued by the employer.

4.6.5 DDOs empowered to obtain evidence of proof or particulars of the prescribed claim (including claim for set-off of loss) under the section 192(2D):

DDOs have been authorized u/s 192 to allow certain deductions, exemptions or allowances or set-off of certain loss as per the provisions of the Act for the purpose of estimating the income of the assessee or computing the amount of tax deductible under the said section. The evidence /proof /particulars for some of the deductions/exemptions/allowances/set-off of loss claimed by the employee such as rent receipt for claiming deduction in HRA, evidence of interest payments for claiming loss from self-occupied house property, etc. is not available to the DDO. To bring certainty and uniformity in this matter, section 192(2D) provides that person responsible for paying (DDOs) shall obtain from the assessee evidence or proof or particular of claims such as House rent Allowance (where aggregate annual rent exceeds one lakh rupees); Leave Travel Concession or Assistance; Deduction of interest under the head ―Income from house property‖ and deduction under Chapter VI-A as per the prescribed form 12BB laid down by Rule 26C of the Rules. **Form 12BB is enclosed as Annexure IIa.**

worksaccounts.com

4.7 Mandatory Quoting of PAN or Aadhaar number as the case may be and TAN:

4.7.1 Section 203A of the Act makes it obligatory for all persons responsible for deducting tax at source to obtain and quote the Tax deduction and collection Account No (TAN) in the challans, TDS-certificates, statements and other documents. Detailed instructions in this regard are available in this Department's Circular No.497 [F.No.275/118/ 87-IT(B) dated 01.10.1987]. If a person fails to comply with the provisions of section 203A, he will be liable to pay, by way of penalty, under section 272BB, a sum of ten thousand rupees. Similarly, as per Section 139A(5B), it is obligatory for persons deducting tax at source to quote PAN or Aadhaar number as the case may be, of the persons from whose income tax has been deducted in the statement furnished u/s 192(2C), certificates furnished u/s 203 and all statements prepared and delivered as per the provisions of section 200(3) of the Act.

4.7.2 All tax deductors are required to file the TDS statements in Form No.24Q (for tax deducted from salaries). As the requirement of filing TDS certificates alongwith the return of income has been done away with, the lack of PAN or or Aadhaar number as the case may be,of deductees is creating difficulties in giving credit for the tax deducted. Tax deductors are, therefore, advised to procure and quote correct PAN or Aadhaar number as the case may be, details of all deductees in the TDS statements for salaries in Form 24Q. Taxpayers are also liable to furnish their correct PAN or Aadhaar number as the case may be,to their deductors. Non-furnishing of PAN or or Aadhaar number as the case may be,by the deductee (employee) to the deductor (employer) will result in deduction of TDS at higher rates u/s 206AA of the Act mentioned in para 4.8 below.

4.8 *Compulsory Requirement to furnish PAN or Aadhaar by employee* (Section 206AA):

4.8.1 Section 206AA in the Act makes furnishing of PAN or Aadhaar number as the case may be,by the employee compulsory in case of receipt of any sum or income or amount, on which tax is deductible. If employee (deductee) fails to furnish his/her PAN or Aadhaar number as the case may be,to the deductor , the deductor has been made responsible to make TDS at higher of the following rates:

i) at the rate specified in the relevant provision of this Act; or
ii) at the rate or rates in force; or
iii) at the rate of twenty per cent.

The deductor has to determine the tax amount in all the three conditions and apply the higher rate of TDS. However, where the income of the employee computed for TDS u/s 192 is below taxable limit, no tax will be deducted. But where the income of the employee computed for TDS u/s 192 is above taxable limit, the deductor will calculate the average rate of income- tax based on rates in force as provided in sec 192. If the tax so calculated is below 20%, deduction of tax will be made at the rate of 20% and in case the average rate exceeds 20%, tax is to be deducted at the average rate. Health and Education cess @ 4% is not to be deducted, in case the tax is deducted at 20% u/s 206AA of the Act.

4.9 Statement of deduction of tax under section 200(3) [Quarterly Statement of TDS]:

4.9.1 The person deducting the tax (employer in case of salary income), is required to file duly verified Quarterly Statements of TDS in **Form 24Q** for the periods [details in Table below] of each financial year, to the TIN Facilitation Centres authorized by DGIT (System's) which is currently managed by M/s National Securities Depository Ltd (NSDL) or at www.incometaxindiaefiling.gov.in after registering as Deductor. Particulars of e-TDS Intermediary at any of the TIN Facilitation Centres are available at http://www.incometaxindia.gov.in and http://tin-nsdl.com portals. ***The requirement of filing an annual return of TDS has been done away with w.e.f. 1.4.2006.*** The quarterly statement

worksaccounts.com

for the last quarter filed in Form 24Q (as amended by Notification No. S.O.704(E) dated 12.5.2006) shall be treated as the annual return of TDS. Due dates of filing this statement quarterwise is as in the Table below:

TABLE: Due dates of filing Quarterly Statements in Form 24Q

Sl. No.	Date of ending of quarter of financial year	Due date
1	30th June	31st July of the financial year
2	30th September	31st October of the financial year
3	31st December	31st January of the financial year
4	31st March	31st May of the financial year immediately following the financial year in which the deduction is made.

Through Taxation and Other Laws (Relaxation and Amendment of Certain Provisions) Act, 2020 (No. 38 of 2020), the due date for furnishing Quarterly Statement in form 24Q, for the fourth Quarter of F.Y. 2019-20 i.e. Quarter ending 31st March, 2020, has been extended up to 31st July, 2020 in case of all deductors. Further, the due date for furnishing such Quarterly Statement for first two Quarters of F.Y. 2020-21 has been extended up to 31st March, 2021.

492 The statements referred above may be furnished in paper form or electronically under digital signature or along with verification of the statement in Form 27A of verified through an electronic process in accordance with the procedures, formats and standards specified by the Director General of Income-tax (Systems). The procedure for furnishing the e-TDS/TCS statement is detailed at Annexure VI.

493 All Returns in Form 24Q are required to be furnished in electronically except in case where the number of deductee records is less than 20 and deductor is not an office of Government, or a company or a person who is required to get his accounts audited under section 44AB of the Act. [Rule 31A(3)].

494 Fee for default in furnishing statements (Section 234E):

If a person fails to deliver or caused to be delivered a statement within the time prescribed in section 200(3) in respect of tax deducted at source [on or after 1.07.2012] he shall be liable to pay, by way of fee a sum of Rs. 200 for every day during which the failure continues. However, the amount of such fee shall not exceed the amount of tax which was deductible at source. This fee is mandatory in nature and to be paid before furnishing of such statement.

495 Rectification of mistake in filing TDS Statement:

A DDO can also file a correction statement for rectification of any mistake or to add, delete or update the information furnished in the statement delivered earlier.

496 Penalty for failure in furnishing statements or furnishing incorrect information (section 271H):

If a person fails to deliver or caused to be delivered a statement within the time prescribed in section 200(3) or furnishes an incorrect statement, in respect of tax deducted at source [on or after 1.07.2012], he shall be liable to pay, by way of penalty a sum which shall not be less than Rs. 10,000/- but which may extend to Rs 1,00,000/-. However, the penalty shall not be levied if the person proves that after paying TDS with the fee and interest, if any, to the

worksaccounts.com

credit of Central Government, he had delivered such statement before the expiry of one year from the time prescribed for delivering the statement.

4.9.7 At the time of preparing statements of tax deducted, the deductor is required to:

(i) mandatory quote his tax deduction and collection account number (TAN) in the statement;
(ii) mandatory quote his permanent account number (PAN) or Aadhaar number as the case may be, in the statement except in the case where the deductor is an office of the Government(including State Government). In case of Government deductors -PANNOTREQD to be quoted in the e-TDS statement;
(iii) mandatory quote of permanent account number PAN or or Aadhaar number as the case may be, of all deductees;
(iv) furnish particulars of the tax paid to the Central Government including book identification number or challan identification number, as the case may be.
(v) furnish particular of amounts paid or credited on which tax was not deducted in view of the issue of certificate of no deduction of tax u/s 197 by the assessing officer of the payee.

4.10 TDS on Income from Pension:

In the case of pensioners who receive their pension (not being family pension paid to a spouse) from a nationalized bank, the instructions contained in this circular shall apply in the same manner as they apply to salary-income. The deductions from the amount of pension under section 80C on account of contribution to Life Insurance, Provident Fund, NSC etc., if the pensioner furnishes the relevant details to the banks, may be allowed. **Necessary instructions in this regard were issued by the Reserve Bank of India to the State Bank of India and other nationalized Banks vide RBI's Pension Circular(Central Series) No.7/C.D.R./1992 (Ref. CO: DGBA: GA (NBS) No.60/GA.64 (11CVL)-/92) dated the 27th April 1992, and, these instructions should be followed by all the branches of the Banks, which have been entrusted with the task of payment of pensions.** Further all branches of the banks are bound u/s 203 to issue certificate of tax deducted in Form 16 to the pensioners as abolished vide CBDT circular no. 761 dated 13.01.98.

4.11. Matters pertaining to the TDS made in case of Non-Resident:

4.11.1 Where Non-Residents are deputed to work in India and taxes are borne by the employer, if any refund becomes due to the employee after he has already left India and has no bank account in India by the time the assessment orders are passed, the refund can be issued to the employer as the tax has been borne by it **[Circular No. 707 dated 11.07.1995].**

4.11.2 In respect of non-residents, the salary paid for services rendered in India shall be regarded as income earned in India. It has been specifically provided in the explanation to section 9(1)(ii) of the Act that any salary payable for rest period or leave period which is both preceded or succeeded by service in India and forms part of the service contract of employment will also be regarded as income earned in India.

5 COMPUTATION OF INCOME UNDER THE HEAD "SALARIES"

5.1 INCOME CHARGEABLE UNDER THE HEAD "SALARIES":

worksaccounts.com

(1) The following income shall be chargeable to income-tax under the head "Salaries" :

(a) any salary due from an employer or a former employer to an assessee in the previous year, whether paid or not;
(b) any salary paid or allowed to him in the previous year by or on behalf of an employer or a former employer though not due or before it became due to him.
(c) any arrears of salary paid or allowed to him in the previous year by or on behalf of an employer or a former employer, if not charged to income-tax for any earlier previous year.

(2) For the removal of doubts, it is clarified that where any salary paid in advance is included in the total income of any person for any previous year it shall not be included again in the total income of the person when the salary becomes due.

Any salary, bonus, commission or remuneration, by whatever name called, due to, or received by, a partner of a firm from the firm shall not be regarded as "Salary".

5.2 DEFINITION OF "SALARY", "PERQUISITE" AND "PROFIT IN LIEU OF SALARY" (SECTION 17):

5.2.1 "Salary" includes: -

i. wages, fees, commissions, perquisites, profits in lieu of, or, in addition to salary, advance of salary, annuity or pension, gratuity, payments in respect of encashment of leave etc.
ii. the portion of the annual accretion to the balance at the credit of the employee participating in a recognized provident fund as consists of {Rule 6 of Part A of the Fourth Schedule of the Act}:
   a) contributions made by the employer to the account of the employee in a recognized provident fund in excess of 12% of the salary of the employee, and
   b) interest credited on the balance to the credit of the employee in so far as it is allowed at a rate exceeding such rate as may be fixed by Central Government by notification in the Official Gazette.
iii. the contribution made by the Central Government or any other employer to the account of the employee under the New Pension Scheme as notified vide Notification F.N. 5/7/2003- ECB&PR dated 22.12.2003 (enclosed as Annexure VII) referred to in section 80CCD (para 5.5.3 of this Circular).

It may be noted that, since salary includes pension, tax at source would have to be deducted from pension also, unless otherwise so required. However, no tax is required to be deducted from the commuted portion of pension to the extent exempt under section 10 (10A).

Family Pension is chargeable to tax under head "Income from other sources" and not under the head "Salaries". Therefore, provisions of section 192 of the Act are not applicable. Hence, DDOs are not required to deduct TDS on family pension paid to person.

5.2.2 Perquisite includes:

I. The value of rent-free accommodation provided to the employee by his employer;
II. The value of any concession in the matter of rent in respect of any accommodation provided to the employee by his employer;

worksaccounts.com

III. The value of any benefit or amenity granted or provided free of cost or at concessional rate in any of the following cases:

i) By a company to an employee who is a director of such company;

ii) By a company to an employee who has a substantial interest in the company;

iii) By an employer (including a company) to an employee, who is not covered by (i) or (ii) above and whose income under the head "Salaries" (whether due from or paid or allowed by one or more employers), exclusive of the value of all benefits and amenities not provided by way of monetary payment, exceeds Rs.50,000/-.

[What constitutes concession in the matter of rent have been prescribed in Explanations 1 to 4 below section 17(2)(ii) of the Act]

IV. Any sum paid by the employer in respect of any obligation which would otherwise have been payable by the assessee.

V. Any sum payable by the employer, whether directly or through a fund, other than a recognized provident fund or an approved superannuation fund or other specified funds u/s 17, to effect an assurance on the life of an assessee or to effect a contract for an annuity.

VI. The value of **any specified security or sweat equity shares allotted or transferred**, directly or indirectly, **by the employer, or former employer**, free of cost or at concessional rate to the employee and for this purpose,

(a) "specified security" means the securities as defined in section 2(h) of the Securities Contracts (Regulation) Act, 1956 and, where employees' stock option has been granted under any plan or scheme therefore, includes the securities offered under such plan or scheme;

(b) "sweat equity shares" means equity shares issued by a company to its employees or directors at a discount or for consideration other than cash for providing know-how or making available rights in the nature of intellectual property rights or value additions, by whatever name called;

(c) the value of any specified security or sweat equity shares shall be the fair market value of the specified security or sweat equity shares, as the case may be, on the date on which the option is exercised by the assessee as reduced by the amount actually paid by, or recovered from the assessee in respect of such security or shares;

(d) "fair market value" means the value determined in accordance with the method as may be prescribed (refer Rule 3(9) of the IT Rules);

(e) "option" means a right but not an obligation granted to an employee to apply for the specified security or sweat equity shares at a predetermined price;

(VII). the amount or the aggregate of amounts of any contribution made to the account of the assessee by the employer—

(a) in a recognised provident fund;

(b) in the scheme referred to in sub-section (1) of section 80CCD; and

(c) in an approved superannuation fund,

to the extent it exceeds seven lakh and fifty thousand rupees in a previous year;

(VIIA). the annual accretion by way of interest, dividend or any other amount of similar nature during the previous year to the balance at the credit of the fund or scheme referred to in

worksaccounts.com

sub-clause (vii) of clause(2) of section 17 to the extent it relates to the contribution referred to in the said sub-clause which is included in total income under the said sub-clause in any previous year computed in such manner as may be prescribed; and

VIII. The **value of any other fringe benefit** or amenity as prescribed in Rule 3.

5.2.2 A Rules for valuation of such benefit or amenity as given in Rule 3 are as under : -

I. Residential Accommodation provided by the employer [Rule 3(1)]:-

"Accommodation" includes a house, flat, farm house or part thereof, hotel accommodation, motel, service apartment, guest house, a caravan, mobile home, ship or other floating structure.

A. For valuation of the perquisite of **rent-free unfurnished accommodation,** all employees are divided into two categories:

(i) For employees of the Central and State governments the value of perquisite shall be **equal to the licence fee charged for such accommodation as reduced by the rent actually paid by the employee. Employees of autonomous, semi-autonomous institutions, PSUs/PSEs & subsidiaries, Universities, etc. are not covered under this method of valuation.**

(ii) For all others, i.e., those salaried taxpayers not in employment of the Central government and the State government, the valuation of perquisite in respect of accommodation would be at prescribed rates, as discussed below:

a) Where the accommodation provided to the employee is **owned by the employer**:

Sl No	Cities having population as per the 2001 census	Perquisite
1	Exceeds 25 lakh	15% of salary
2	Exceeds 10 lakhs but does not exceed 25 lakhs	10% of salary
3	For other places	7.5 % of salary

b) Where the accommodation so provided is taken on lease/ rent by the employer:

The prescribed rate is 15% of the salary or the actual amount of lease rental payable by the employer, whichever is lower, as reduced by any amount of rent paid by the employee.

Meaning of 'Salary' for the purpose of calculation of perquisite in respect of Residential Accommodation:

a. Basic Salary;
b. Dearness Allowance, or Dearness Pay if it enters into the computation of superannuation or retirement benefit of the employees;
c. Bonus;
d. Commission;
e. All other taxable allowances (excluding the portion not taxable); and
f. Any monetary payment which is chargeable to tax (by whatever name called).

Salary from all employers shall be taken into consideration in respect of the period during which an accommodation is provided. Where on account of the transfer of an employee from one place to another, he is provided with accommodation at the new place of posting while retaining the accommodation at the other place, the value of perquisite shall be determined

worksaccounts.com

with reference to only one such accommodation which has the lower value for a period not exceeding 90 days and thereafter the value of perquisite shall be charged for both such accommodation.

B Valuation of the perquisite of **furnished accommodation**- the value of perquisite as determined by the above method (in A) shall be increased by-

i) 10% of the cost of furniture, appliances and equipments, or
ii) where the furniture, appliances and equipments have been taken on hire, by the amount of actual hire charges payable

and the value so arrived at shall be reduced by any charges paid by the employee himself.

It is added that where the accommodation is provided by the Central Government or any State Government to an employee who is serving on deputation with any body or undertaking under the control of such Government, -

(i). the employer of such an employee shall be deemed to be that body or undertaking where the employee is serving on deputation; and
(ii). the value of perquisite of such an accommodation shall be the amount calculated in accordance with Table in A(ii)(a) above, as if the accommodation is owned by the employer.

C. **Furnished Accommodation in a Hotel:** The value of perquisite shall be determined on the basis of lower of the following two:

1. 24% of salary paid or payable in respect of period during which the accommodation is provided; or
2. Actual charges paid or payable by the employer to such hotel,

for the period during which such accommodation is provided as reduced by any rent actually paid or payable by the employee.

However, nothing in (C) shall be taxable if following two conditions are satisfied:

1. The hotel accommodation is provided for a total period not exceeding in aggregate 15 days in a previous year, and
2. Such accommodation is provided on an employee's transfer from one place to another place.

It may be clarified that while services provided as an integral part of the accommodation, need not be valued separately as perquisite, any other services over and above that for which the employer makes payment or reimburses the employee shall be valued as a perquisite as per the residual clause. In other words, composite tariff for accommodation will be valued as per the Rules and any other charges for other facilities provided by the hotel will be separately valued under the residual clause.

D. However, the value of any accommodation provided to an employee working at a mining site or an on-shore oil exploration site or a project execution site or a dam site or a power generation site or an off-shore site will not be treated as a perquisite if:

(i) such accommodation is located in a "remote area" or
(ii) where it is not located in a "remote area", the accommodation is of a temporary nature having plinth area of not more than 800 square feet and should not be located within 8 kilometers of the local limits of any municipality or cantonment board.

worksaccounts.com

A project execution site here means a site of project up to the stage of its commissioning. A "remote area" means an area located at least 40 kilometers away from a town having a population not exceeding 20,000 as per the latest published all-India census.

II. Perquisite on Motor car provided by the Employer [Rule 3(2)]:

(I) If an employer provides motor car facility to his employee, the value of such perquisite shall be :

a) Nil, if the motor car is used by the employee wholly and exclusively in the performance of his official duties. However following compliances are necessary:

- The employer has maintained complete details of the journey undertaken for official purposes;
- The employer gives a certificate that the expenditure was incurred wholly for official duties.

b) Actual expenditure incurred by the employer on the running and maintenance of motor car including remuneration to chauffeur as increased by the amount representing normal wear and tear of the motor car and as reduced by any amount charged from the employee for such use (in case the motor car is exclusively for private or personal purposes of the employee or any member of his household).

c) Rs. 1800/- (plus Rs. 900/-, if chauffeur is also provided) per month (in case the motor car is used partly in performance of duties and partly for private or personal purposes of the employee or any member of his household if the expenses on maintenance and running of motor car are met or reimbursed by the employer). However, the value of perquisite will be Rs. 2400/-(plus Rs. 900/-, if chauffeur is also provided) per month if the cubic capacity of engine of the motor car exceeds 1.6 litres.

(II)Rs. 600/- (plus Rs. 900/-, if chauffeur is also provided) per month (In case the motor car is used partly in performance of duties and partly for private or personal purposes of the employee or any member of his household if the expenses on maintenance and running of motor car for such private or personal use are fully met by the employee). However, the value of perquisite will be Rs. 900/- (plus Rs. 900/-, if chauffeur is also provided) per month if the cubic capacity of engine of the motor car exceeds 1.6 litres. If the motor car or any other automotive conveyance is owned by the employee but the actual running and maintenance charges are met or reimbursed by the employer, the method of valuation of perquisite value is different and as below:

a) where the motor car or any other automotive conveyance is owned by the employee but actual maintenance & running expenses (including chauffeur salary, if any) are met or reimbursed by the employer, no perquisite shall be chargeable to tax if the car is used wholly and exclusively for official purposes. However following compliances are necessary:

- The employer has maintained complete details of the journey undertaken for official purposes;
- The employer gives a certificate that the expenditure was incurred wholly for official duties.

However, if the motor car is used partly for official or partly for private purposes then the amount of perquisite shall be the actual expenditure incurred by the employer as reduced by the amounts in c) referred to in (1) above.

worksaccounts.com

Normal wear and tear of the motor shall be taken at 10 % per annum of the actual cost of the motor car.

III **Personal attendants etc. [Rule 3(3)]:** The value of free service of all personal attendants including a sweeper, gardener and a watchman is to be taken at actual cost to the employer. Where the attendant is provided at the residence of the employee, full cost will be taxed as perquisite in the hands of the employee irrespective of the degree of personal service rendered to him. Any amount paid by the employee for such facilities or services shall be reduced from the above amount.

IV **Gas, electricity & water for household consumption [Rule 3(4)]:** The value of perquisite in the nature of gas, electricity and water shall be the amount paid by the employer. Where the supply is made from the employer's own resources, the manufacturing cost per unit incurred by the employer would be taken for the valuation of perquisite. Any amount paid by the employee for such facilities or services shall be reduced from the perquisite value.

V **Free or concessional education [Rule 3(5)]:** Perquisite on account of free or concessional education for any member of the employee's household shall be determined as the sum equal to the amount of expenditure incurred by the employer in that behalf. However, where such educational institution itself is maintained and owned by the employer or where such free educational facilities are provided in any institution by reason of his being in employment of that employer, the value of the perquisite to the employee shall be determined with reference to the cost of such education in a similar institution in or near the locality if the cost of such education or such benefit per child exceeds Rs.1000/- p.m. The value of perquisite shall be reduced by the amount, if any, paid or recovered from the employee.

VI **Carriage of Passenger Goods [Rule 3(6)]:** The value of any benefit or amenity resulting from the provision by an employer, who is engaged in the carriage of passengers or goods, to any employee or to any member of his household for personal or private journey free of cost or at concessional fare, in any conveyance owned, leased or made available by any other arrangement by such employer for the purpose of transport of passengers or goods shall be taken to be the value at which such benefit or amenity is offered by such employer to the public as reduced by the amount, if any, paid by or recovered from the employee for such benefit or amenity. This will not apply to the employees of any airline or the railways.

VII **Interest free or concessional loans [Rule 3(7)(i)]**: It is common practice, particularly in financial institutions, to provide interest free or concessional loans to employees or any member of his household. The value of perquisite arising from such loans would be the excess of interest payable at **prescribed interest rate** over interest, if any, actually paid by the employee or any member of his household. The **prescribed interest rate** would now be **the rate charged per annum by the State Bank of India as on the 1st day of the relevant financial year in respect of loans of same type and for the same purpose advanced by it to the general public.** Perquisite value would be calculated on the basis of the maximum outstanding monthly balance method. For valuing perquisites under this rule, any other method of calculation and adjustment otherwise adopted by the employer shall not be relevant. However, small loans up to Rs. 20,000/- in the aggregate are exempt.

Loans for medical treatment of diseases specified in Rule 3A are also exempt, provided the amount of loan for medical reimbursement is not reimbursed under any medical insurance scheme. Where any medical insurance reimbursement is received, the perquisite value at the prescribed rate shall be charged from the date of reimbursement on the amount reimbursed, but not repaid against the outstanding loan taken specifically for this purpose.

worksaccounts.com

VIII Perquisite on account of travelling, touring, accommodation and any other expenses paid for or reimbursed by the employer for any holiday availed [Rule 3(7)(ii)]:

The value of perquisite on account of travelling, touring, accommodation and any other expenses paid for or reimbursed by the employer for any holiday availed of by the employee or any member of his household, other than leave travel concession (as per section 10(5)), shall be the amount of the expenditure incurred by the employer in that behalf. However, any amount recovered from or paid by the employee shall be reduced from the perquisite value so determined.

Where such facility is maintained by the employer, and is not available uniformly to all employees, the value of benefit shall be taken to be the value at which such facilities are offered by other agencies to the public. If a holiday facility is maintained by the employer and is available uniformly to all employees, the value of such benefit would be exempt.

Where the employee is on official tour and the expenses are incurred in respect of any member of his household accompanying him, the amount of expenditure with respect to the member of the household shall be a perquisite.

IX Value of Subsidized / Free food / non-alcoholic beverages provided by employer to an employee[Rule 3(7)(iii)]:

Value of taxable perquisite is calculated as under:

Expenditure incurred by the employer on the value of food / non-alcoholic beverages including _paid vouchers which are not transferable and usable only at eating joints'		XXX
Less: Fixed value of a sum of Rs. 50/- per meal		XXX
Less: Amount recovered from the employee	XXX	XXX
Balance amount is the taxable as perquisites on the value of food provided to the employees		XXX

Note : Exemption is given in following situations :

1. Tea / snacks provided in working hours.
2. Food & non-alcoholic beverages provided in working hours in remote area or in an offshore installation.

Vide Notification no. G.S.R. 415(E) dated 26.06.2020, the said rule has been amended so as to provide that in case of an assessee opting for concessional taxation regime under section 115BAC of the Act, the exemption provided in respect of free food and non-alcoholic beverages provided by employer through paid voucher shall not be available.

X Gifts [Rule 3(7)(iv)]:

The value of any gift or vouchers or token in lieu of which such gift may be received, given by the employer to the employee or member of his household, is taxable as perquisite. However gift, etc less than Rs. 5,000 in aggregate per annum would be exempt.

XI Membership fees and Annual Fees [Rule 3(7)(v)]: Any membership fees and annual

worksaccounts.com

fees incurred by the employee (or any member of his household), which is charged to a credit card (including any add-on card) provided by the employer, or otherwise, paid for or reimbursed by the employer is taxable on the following basis:

Amount of expenditure incurred by the employer		XXX
Less : Expenditure on use for official purposes	XXX	
Less : Amount, if any, recovered from the employee	XXX	XXX
Amount taxable as perquisite		XXX

However if the amount is incurred wholly and exclusively for official purposes it will be exempt if the following conditions are fulfilled

i) Complete details of such expense, including date and nature of expenditure, is maintained by the employer.

ii) Employer gives a certificate that the same was incurred wholly and exclusively for official purpose.

XII Club Expenditure [Rule 3(7)(vi)]:

Any annual or periodical fee for Club facility and any expenditure in a club by the employee (or any member of his household), which is paid or reimbursed by the employer is taxable on the following basis:

Amount of expenditure incurred by the employer		XXX
Less : Expenditure on use for official purposes	XXX	
Less : Amount, if any, recovered from the employee	XXX	XXX
Amount taxable as perquisite		XXX

However, if the amount is incurred wholly and exclusively for official purposes it will be exempt if the following conditions are fulfilled

i) Complete details of such expense, including date and nature of expenditure and its business expediency is maintained by the employer.

ii) Employer gives a certificate that the same was incurred wholly and exclusively for official purpose.

Note: 1) Health club, sport facilities etc. provided uniformly to all classes of employee by the employer at the employer's premises and expenditure incurred on them are exempt.
2) The initial one-time deposits or fees for corporate or institutional membership, where benefit does not remain with a particular employee after cessation of employment are exempt. Initial fees / deposits, in such case, is not included.

XIII **Use of assets [Rule 3(7)(vii)]:** It is common practice for a movable asset other than those referred in other sub rules of rule 3 owned by the employer to be used by the employee or any member of his household. This perquisite is to be charged at the rate of 10% of the original cost of the asset as reduced by any charges recovered from the employee for such use. However, the use of Computers and Laptops would not give rise to any perquisite.

XIV **Transfer of assets [Rule 3(7)(viii)]:** Often an employee or member of his household benefits from the transfer of movable asset (not being shares or securities) at no cost or at a cost less than its market value from the employer. The difference between the original cost of the movable asset (not being shares or securities) and the sum, if any, paid by the employee, shall be taken as the value of perquisite. In case of a movable asset, which has already been put to use, the original cost shall be reduced by a sum of 10% of such original cost for every completed year of use of the asset. Owing to a higher degree of obsolescence, in case of computers and electronic gadgets, however, the value of perquisite shall be

worksaccounts.com

worked out by reducing 50% of the actual cost by the reducing balance method for each completed year of use. Electronic gadgets in this case means data storage and handling devices like computer, digital diaries and printers. They do not include household appliance (i.e. white goods) like washing machines, microwave ovens, mixers, hot plates, ovens etc. Similarly, in case of cars, the value of perquisite shall be worked out by reducing 20% of its actual cost by the reducing balance method for each completed year of use.

XV **Medical Reimbursement by the employer** As per the amendment vide Finance Act, 2018, the total amount of medical re-imbursement-is to be taken as perquisite under section 17(2).

It is further clarified that the method regarding valuation of perquisites are given in section 17(2) of the Act and in rule 3 of the Rules. The deductors may look into the above provisions carefully before they determine the perquisite value for deduction purposes.

5.2.3 'Profits in lieu of salary' shall include

I. the amount of any compensation due to or received by an assessee from his employer or former employer at or in connection with the termination of his employment or the modification of the terms and conditions relating thereto;

II. any payment (other than any payment referred to in clauses (10), (*10A*), (*10B*), (*11*), (*12*) (*13*) or (*13A*) of section 10 due to or received by an assessee from an employer or a former employer or from a provident or other fund, to the extent to which it does not consist of contributions by the assessee or interest on such contributions or any sum received under a Keyman insurance policy including the sum allocated by way of bonus on such policy.

"Keyman insurance policy" shall have the same meaning as assigned to it in section 10(*10D*);

III. any amount due to or received, whether in lump sum or otherwise, by any assessee from any person—

(A) before his joining any employment with that person; or
(B) after cessation of his employment with that person.

5.3 INCOMES NOT INCLUDED UNDER THE HEAD "SALARIES" (EXEMPTIONS)

Any income falling within any of the following clauses shall not be included in computing the income from salaries for the purpose of section 192 of the Act :-

5.3.1 The value of any **travel concession or assistance** received by or due to an employee from his employer or former employer for himself and his family, in connection with his proceeding (a) on leave to **any place in India** or (b) after retirement from service, or, after termination of service to any place in India is exempt under Section 10(5) subject, however, to the conditions prescribed in Rule 2B of the Rules.

For the purpose of this clause, "family" in relation to an individual means:

(i) the spouse and children of the individual; and
(ii) the parents, brothers and sisters of the individual or any of them, wholly or mainly dependent on the individual.

worksaccounts.com

It may also be noted that the amount exempt under this clause shall in no case exceed the amount of expenses actually incurred for the purpose of such travel.

As discussed in para 4.6.5 section 192 (2D) read with the rule 26C makes it mandatory for the DDO to obtain details/evidence in respect of claim of exemption for leave travel concession or assistance before allowing the said exemption the relevant form for furnishing details by employee is Form 12BB.

Government of India allowed payment of cash allowance equivalent to LTC fare to central Government employees subject to fulfillment of certain conditions vide OM No. F.No. 12(2)/2020-EII(A) dated 12th October, 2020. It has been provided that since the cash allowance of LTC fare is in lieu of deemed actual travel, the same shall be eligible for Income- tax exemption on the lines of existing Income-tax exemption available for LTC fare. Further in order to provide similar Income-tax exemptions to the non-Central Government employees, Government of India announced vide Press note dated 29.10.2020 that the payment of cash allowance, subject to maximum of Rs. 36,000 per person as Deemed LTC fare per person (Round Trip) to non-Central Government employees, shall also be allowed Income-tax exemption subject to the conditions laid down in the said Press note. Further, as this exemption is in lieu of the exemption provided for LTC fare, in case of an employee who has exercised an option to pay Income-tax under concessional tax regime under section 115BAC of the Income-tax Act shall not be entitled for this exemption. It has also been mentioned that the DDOs shall allow Income-tax exemption subject to fulfillment of the specified conditions after obtaining copies of invoices of specified expenditure incurred during the specified period.

532 **Death-cum-retirement gratuity** or any other gratuity is exempt to the extent specified from inclusion in computing the total income under Section 10(10). Any death-*cum*-retirement gratuity received under the revised Pension Rules of the Central Government or, as the case may be, the Central Civil Services (Pension) Rules, 1972, or under any similar scheme applicable to the members of the civil services of the Union or holders of posts connected with defence or of civil posts under the Union (such members or holders being persons not governed by the said Rules) or to the members of the all-India services or to the members of the civil services of a State or holders of civil posts under a State or to the employees of a local authority or any payment of retiring gratuity received under the Pension Code or Regulations applicable to the members of the defence service is exempt. Gratuity received in cases other than those mentioned above, on retirement, termination etc is exempt up to the limit as prescribed by the Board. Presently the limit is Rs. 20 lakhs w.e.f. 29.03.2018 [Notification No. 16/2019/F. No. 200/8/2018-ITA-I dated 08.03.2019]

533 Any payment in **commutation of pension** received under the Civil Pensions (Commutation) Rules of the Central Government or under any similar scheme applicable to the members of the civil services of the Union or holders of posts connected with defence or of civil posts under the Union (such members or holders being persons not governed by the said Rules) or to the members of the all- India services or to the members of the defence services or to the members of the civil services of a State or holders of civil posts under a State or to the employees of a local authority] or a corporation established by a Central, State or Provincial Act, is exempt under Section10(10A)(i). As regards payments in commutation of pension received under any scheme of any other employer, exemption will be governed by the provisions of section 10(10A)(ii). Also, any payment in commutation of pension from a fund referred to in Section 10(23AAB) is exempt under Section 10(10A) (iii).

534 Any payment received by an employee of the Central Government or a State Government, as **cash-equivalent of the leave salary** in respect of the period of earned leave at his credit **at the time of his retirement**, whether on superannuation or otherwise, is

worksaccounts.com

exempt under Section 10(10AA)(i). In the case of other employees, this exemption will be determined with reference to the leave to their credit at the time of retirement on superannuation or otherwise, subject to a maximum of ten months' leave. This exemption will be further limited to the maximum amount specified by the Government of India Notification No.S.O.588(E) dated 31.05.2002 at Rs. 3,00,000/- in relation to such employees who retire, whether on superannuation or otherwise, after 1.4.1998.

535 Under Section 10(10B), the **retrenchment compensation** received by a workman is exempt from income-tax subject to certain limits. The maximum amount of retrenchment compensation exempt is the sum calculated on the basis provided in section 25F(b) of the Industrial Disputes Act, 1947 or any amount not less than Rs.50,000/- as the Central Government may by notification specify in the Official Gazette, whichever is less. These limits shall not apply in the case where the compensation is paid under any scheme which is approved in this behalf by the Central Government, having regard to the need for extending special protection to the workmen in the undertaking to which the scheme applies and other relevant circumstances. The maximum limit of such payment is Rs. 5,00,000/- where retrenchment is on or after 1.1.1997 as specified in Notification No. 10969 dated 25-06-1999.

536 Under Section 10(10C), any payment received or receivable (even if received in installments) by an employee of the following bodies at the time of his voluntary retirement or termination of his service, in accordance with any scheme or **schemes of voluntary retirement** or in the case of public sector company, a **scheme of voluntary separation**, is exempt from income-tax to the extent that such amount does not exceed Rs. 5,00,000/-:

a) A public sector company;
b) Any other company;
c) An Authority established under a Central, State or Provincial Act;
d) A Local Authority;
e) A Cooperative Society;
f) A university established or incorporated or under a Central, State or Provincial Act, or, an Institution declared to be a University under section 3 of the University Grants Commission Act, 1956;
g) Any Indian Institute of Technology within the meaning of Section 3 (g) of the Institute of Technology Act, 1961;
h) Such Institute of Management as the Central Government may by notification in the Official Gazette, specify in this behalf.

The exemption of amount received under VRS has been extended to employees of the Central Government and State Government and employees of notified institutions having importance throughout India or any State or States. It may also be noted that where this exemption has been allowed to any employee for any assessment year, it shall not be allowed to him for any other assessment year. Further, if relief has been allowed under section 89 for any assessment year in respect of amount received on voluntary retirement or superannuation, no exemption under section 10(10C) shall be available.

537 Any **sum received under a Life Insurance Policy [Sec 10(10D)]**, including the sum allocated by way of bonus on such policy other than the following is exempt under section 10(10D):

i) any sum received under section 80DD(3) or section 80DDA(3); or
ii) any sum received under a Keyman insurance policy; or
iii) any sum received under an insurance policy issued on or after 1.4.2003, but on or before 31-03-2012, in respect of which the premium payable for any of the years during the term of the policy exceeds 20 percent of the actual

worksaccounts.com

capital sum assured; or

iv) any sum received under an insurance policy issued on or after 1.4.2012 in respect of which the premium payable for any of the years during the term of the policy exceeds 10 percent of the actual capital sum assured; or

v) any sum received under an insurance policy issued on or after 1.4.2013 in cases of persons with disability or person with severe disability as per Sec 80U or suffering from disease or ailment as specified in Sec 80DDB, in respect of which the premium payable for any of the years during the term of the policy exceeds 15 percent of the actual capital sum assured

However, any sum received under such policy referred to in (iii), (iv) and (v) above, on the death of a person would be exempt.

Under section 10 (12A) of the Act, any **payment from the National Pension System** Trust to an assessee on closure of his account or on his opting out of the pension scheme referred to in section 80CCD to the extent it does not exceed sixty percent from financial year 2019-20[as amended by Finance (NO.2) Act, 2019] , of the total amount payable to him at the time such closure of his opting out of the scheme shall be exempt.

Under section 10 (12B) of the Act, any **payment from the National Pension System** Trust to an employee under the pension scheme referred to in section 80CCD, on partial withdrawal made out of his account in accordance with the terms and conditions, specified under the Pension Fund regulatory and Development Authority Act, 2013 and the regulation made thereunder, to the extent it does not exceed twenty-five percent of the amount of contribution made by him shall be exempt.

538 Any **payment from a Provident Fund** to which the Provident Funds Act, 1925, applies or from any other provident fund set up by the Central Government and notified by it in the Official Gazette is exempt under section 10(11).

539 Under section **10(13A)** of the Act, any special allowance specifically granted to an assessee by his employer to meet **expenditure incurred on payment of rent** (by whatever name called) in respect of residential accommodation occupied by the assessee is exempt from Income-tax to the extent as may be prescribed, having regard to the area or place in which such accommodation is situated and other relevant considerations. According to Rule 2A of the Rules, the quantum of exemption allowable on account of grant of special allowance to meet expenditure on payment of rent shall be the least of the following:

(a) the actual amount of such allowance received by the assessee in respect of the relevant period i. e. the period during which the accommodation was occupied by the assesse during the financial year; or

(b) the actual expenditure incurred in payment of rent in excess of one-tenth of the salary due for the relevant period; or

(i) where such accommodation is situated in Bombay, Calcutta, Delhi or Madras, 50% of the salary due to the employee for the relevant period; or

(ii) where such accommodation is situated in any other places, 40% of the salary due to the employee for the relevant period.

For this purpose, "Salary" includes dearness allowance, if the terms of employment so provide, but excludes all other allowances and perquisites.

worksaccounts.com

It has to be noted that only the expenditure actually incurred on payment of rent in respect of residential accommodation occupied by the assessee subject to the limits laid down in Rule 2A, qualifies for exemption from income-tax. Thus, house rent allowance granted to an employee who is residing in a house/flat owned by him is not exempt from income-tax.

As discussed in para 4.6.5 section 192 (2D) read with rule 26C makes it obligatory for the DDO to obtain following details/evidences in respect of exemptions for house rent allowance.
(i) Rend paid to the landlord
(ii) Name of the landlord
(iii) Address of the landlord
(iv) PAN or Aadhaar number as the case may be, of the landlord
Where the aggregate rent paid during the financial year exceeds one lakh Rs the employee is required to furnish these details in Form 12BB.

5.3.10 Section 10(14) provides for exemption of the following allowances :-

(i) Any special allowance or benefit granted to an employee to meet the **expenses wholly, necessarily and exclusively incurred in the performance of his duties** as prescribed under Rule 2BB subject to the extent to which such expenses are actually incurred for that purpose.
(ii) Any allowance granted to an employee either to meet his personal expenses at the place of his posting or at the place he ordinarily resides or to **compensate him for the increased cost of living**, which may be prescribed and to the extent as may be prescribed.

However, the allowance referred to in (ii) above should not be in the nature of a personal allowance granted to the assessee to remunerate or compensate him for performing duties of a special nature relating to his office or employment unless such allowance is related to his place of posting or residence.

It is further clarified that any allowance granted to an employee which is not exempted under section 10(14) read with rule 2BB or the sum of allowance exceeding the amount prescribed under rule shall be chargeable to tax under the head income from salary. For example no exemption is provided in rule 2BB for the training allowance paid for the posting in any training institute hence whole of the training allowance shall be included in the salary.

The CBDT has prescribed guidelines for the purpose of Section 10(14) (i) & 10 (14) (ii) vide notification No.SO 617(E) dated 7th July, 1995 (F.No.142/9/95-TPL)which has been amended vide notification SO No.403(E) dt 24.4.2000 (F.No.142/34/99-TPL). Rule 2BB has been amended and the exemption in respect of transport allowance for financial year 2018-19 shall be available upto Rs. 3200 per month only to the person who is blind or orthopedically handicapped with disabilities of lower extremities, to meet the his expenditure for the purpose of commuting between the place of the residence and the place of his duties.

5.3.11 Under Section 10(15)(iv)(i) of the Act, interest payable by the Government on deposits made by an employee of the Central Government or a State Government or a public sector company out of his retirement benefits, in accordance with such scheme framed in this behalf by the Central Government and notified in the Official Gazette is exempt from income-tax. By notification No.F.2/14/89-NS-II dated 7.6.89, as amended

worksaccounts.com

by notification No.F.2/14/89-NS-II dated 12.10.89, the Central Government has notified a scheme called **Deposit Scheme for Retiring Government Employees, 1989** for the purpose of the said clause.

5.3.12 Any scholarship granted to meet the cost of education is not to be included in total income as per provisions of section 10(16) of the Act.

5.3.13 Section 10(18) provides for exemption of any income by way of pension received by an individual who has been in the service of the Central Government or State Government and has been awarded "Param Vir Chakra" or "Maha Vir Chakra" or "Vir Chakra" or such other gallantry award as may be specifically notified by the Central Government. Family pension received by any member of the family of such individual is also exempt [Notifications No.S.O.1948(E) dated 24.11.2000 and 81(E) dated 29.1.2001, which are enclosed as per Annexure VIII & IX]. ‑Family‖ for this purpose shall have the meaning assigned to it in Section 10(5) of the Act.

DDO may not deduct any tax in the case of recipients of such awards after satisfying himself about the veracity of the claim.

5.3.14 Under Section 17 of the Act, exemption from tax will also be available in respect of:-

(a) the value of any **medical treatment** provided to an employee or any member of his family, in any hospital maintained by the employer;
(b) any sum paid by the employer in respect of any expenditure actually incurred by the employee on his medical treatment or of any member of his family:

> (i) in any hospital maintained by the Government or any local authority or any other hospital approved by the Government for the purposes of medical treatment of its employees;
> ii) in respect of the prescribed diseases or ailments as provided in Rule 3A(2) of the Rules in any hospital approved by the Chief Commissioner having regard to the prescribed guidelines as provided in Rule 3(A)(1)of the Rules,

(c) premium paid by the employer in respect of medical insurance taken for his employees (under any scheme approved by the Central Government or Insurance Regulatory and Development Authority) or reimbursement of insurance premium to the employees who take medical insurance for themselves or for their family members (under any scheme approved by the Central Government or Insurance Regulatory and Development Authority);

(d)As regards medical treatment abroad, the actual expenditure on stay and treatment abroad of the employee or any member of his family, or, on stay abroad of one attendant who accompanies the patient, in connection with such treatment, will be excluded from perquisites to the extent permitted by the Reserve Bank of India. It may be noted that the expenditure incurred on travel abroad by the patient/attendant, shall be excluded from perquisites only if the employee's gross total income, as computed before including the said expenditure, does not exceed Rs.2 lakhs.

For the purpose of availing exemption on expenditure incurred on medical treatment, "hospital" includes a dispensary or clinic or nursing home, and "family" in relation to an individual means the spouse and children of the individual. Family also includes parents, brothers and sisters of the individual if they are wholly or mainly dependent on the individual.

worksaccounts.com

It is pertinent to mention that benefits specifically exempt u/s 10(13A), 10(5), 10(14), 17 etc. of the Act would continue to be exempt. These include benefits like house rent allowance, leave travel concession, travel expense allowance on tour and transfer, daily allowance to meet tour expenses as prescribed, medical facilities subject to conditions.

5.3.15 In this connection it is to be noted that as per sec. 10 (14) read with rule 2BB any allowance granted to meet the cost of travel on tour or on transfer includes any sum paid in connection with transfer, packing and transportation of personal effects on such transfer shall be exempt. Also any allowance, whether, granted for the period of journey in connection with transfer, to meet the ordinary daily charges incurred by an employee on account of absence from his normal place of duty shall be exempt.

5.3.16 Vide Notification no. G.S.R. 415(E) dated 26.06.2020, rule 2BB has been amended so as to provide that in case of an assessee opting for concessional taxation regime under section 115BAC of the Act shall be entitled exemption only in respect of the following allowances:

(a) Transport Allowance granted to an employee who is blind or deaf and dumb or orthopaedically handicapped with disability of lower extremities to meet expenditure for the purpose of commuting between place of his residence and place of his duty;

(b) Any allowance granted to meet the cost of travel on tour or on transfer;

(c) Any allowance, whether, granted on tour or for the period of journey in connection with transfer, to meet the ordinary daily charges incurred by an employee on account of absence from his normal place of duty;

(d) Any allowance granted to meet the expenditure incurred on conveyance in performance of duties of an office or employment of profit subject to the condition that the free conveyance is not provided by the employer."

5.4 DEDUCTIONS U/S 16 OF THE ACT

5.4.1 Standard deduction under section 16 (ia):

From financial year 2019-20, a deduction of fifty thousand rupees or the amount of salary whichever is less shall be allowed as standard deduction.

5.4.2 Entertainment Allowance [Section 16(ii)]:

A deduction is also allowed under section 16(ii) in respect of any allowance in the nature of an entertainment allowance specifically granted by an employer to the assessee, who is in receipt of a salary from the Government, a sum equal to one-fifth of his salary(exclusive of any allowance, benefit or other perquisite) or five thousand rupees whichever is less. No deduction on account of entertainment allowance is available to non-government employees.

5.4.3 Tax on Employment [Section 16(iii)]:

The tax on employment (Professional Tax) within the meaning of article 276(2) of the

worksaccounts.com

Constitution of India, leviable by or under any law, shall also be allowed as a deduction in computing the income under the head "Salaries".

5.5 DEDUCTIONS UNDER CHAPTER VI-A OF THE ACT

In computing the taxable income of the employee, the following deductions under Chapter VI-A of the Act are to be allowed from his gross total income:

5.5.1 Deduction in respect of Life insurance premia, deferred annuity, contributions to provident fund, subscription to certain equity shares or debentures, etc. (section 80C)

A. **Section 80C**, entitles an employee to deductions for the whole of amounts paid or deposited in the current financial year in the following schemes, **subject to a limit of Rs.1,50,000/-**:

(1) Payment of **insurance premium** to effect or to keep in force an insurance on the life of the individual, the spouse or any child of the individual.

(2) Any payment made to effect or to keep in force a contract for a **deferred annuity**, not being an annuity plan as is referred to in item (7) herein below on the life of the individual, the spouse or any child of the individual, provided that such contract does not contain a provision for the exercise by the insured of an option to receive a cash payment in lieu of the payment of the annuity;

(3) Any sum deducted from the salary payable by, or, on behalf of the Government to any individual, being a sum deducted in accordance with the conditions of his service for the purpose of securing to him a **deferred annuity** or making provision for his spouse or children, in so far as the sum deducted does not exceed 1/5th of the salary;

(4) Any contribution made :

(a) by an individual to any **Provident Fund** to which the Provident Fund Act, 1925 applies;

(b) to any provident fund set up by the Central Government, and notified by it in this behalf in the Official Gazette, where such contribution is to an account standing in the name of an individual, or spouse or children;

[The Central Government has since notified Public Provident Fund vide Notification S.O. No. 1559(E) dated 3.11.05]

(c) by an employee to a Recognized Provident Fund;

(d) by an employee to an approved superannuation fund;

It may be noted that "contribution" to any Fund shall not include any sums in repayment of loan or advance;

(5) Any sum paid or deposited during the year as a subscription :-

(a) in the name of employee or a girl child of that employee including a girl child for whom the employee is the legal guardian in any such security of the Central Government or any such deposit scheme as the Central Government may, by notification in the Official Gazette, specify in this behalf;

[The Central Government has since notified the scheme "**Sukanya Samriddhi Account**' vide Notification GSR No. 863(E) dated 02.12.2014]

(b) to any such saving certificates as defined under section 2(c) of the Government Saving Certificate Act, 1959 as the Government may, by notification in the Official

worksaccounts.com

Gazette, specify in this behalf.

(c) [The Central Government has since notified National Saving Certificate (VIIIth Issue) vide Notification S.O. No. 1560(E) dated 3.11.05 and National Saving Certificate (IXth Issue) vide Notification . G.S.R. 848 (E), dated the 29th November, 2011, publishing the National Savings Certificates (IX- Issue) Rules, 2011 G.S.R. 868 (E), dated the 7th December, 2011, specifying the National Savings Certificates IX Issue as the class of Savings Certificates F No1-13/2011-NS-II r/w amendment Notification No.GSR 319(E), dated 25-4-2012]

(6) Any sum paid as contribution in the case of an individual, for himself, spouse or any child,

a. for participation in the Unit Linked Insurance Plan, 1971 of the Unit Trust of India;
b. for participation in any unit-linked insurance plan of the LIC Mutual Fund referred to section 10 (23D) and as notified by the Central Government.

[The Central Government has since notified Unit Linked Insurance Plan (formerly known as Dhanraksha, 1989) of LIC Mutual Fund vide Notification S.O. No. 1561(E) dated 3.11.05.]

(7) Any subscription made to effect or keep in force a contract for such annuity plan of the Life Insurance Corporation or any other insurer as the Central Government may, by notification in the Official Gazette, specify;

[The Central Government has since notified New Jeevan Dhara, New Jeevan Dhara-I, New Jeevan Akshay, New Jeevan Akshay-I and New Jeevan Akshay-II vide Notification
S.O. No. 1562(E) dated 3.11.05 and Jeevan Akshay-III vide Notification S.O. No. 847(E) dated 1.6.2006]

(8) Any subscription made to any units of any Mutual Fund, of section 10(23D), or from the Administrator or the specified company referred to in Unit Trust of India (Transfer of Undertaking & Repeal) Act, 2002 under any plan formulated in accordance with any scheme as the Central Government, may, by notification in the Official Gazette, specify in this behalf;

[The Central Government has since notified the Equity Linked Saving Scheme, 2005 for this purpose vide Notification S.O. No. 1563(E) dated 3.11.2005]

The investments made after 1.4.2006 in plans formulated in accordance with Equity Linked Saving Scheme, 1992 or Equity Linked Saving Scheme, 1998 shall also qualify for deduction under section 80C.

(9) Any contribution made by an individual to any pension fund set up by any Mutual Fund referred to in section 10(23D), or, by the Administrator or the specified company defined in Unit Trust of India (Transfer of Undertaking & Repeal) Act, 2002, as the Central Government may, by notification in the Official Gazette, specify in this behalf;

[The Central Government has since notified the Equity Linked Saving Scheme, 2005 for this purpose vide Notification S.O. No. 1563(E) dated 3.11.2005]

(10) Any subscription made to any such deposit scheme of, or, any contribution made to any such pension fund set up by, the National Housing Bank, as the Central Government may, by notification in the Official Gazette, specify in this behalf;

(11) Any subscription made to any such deposit scheme, as the Central Government may, by notification in the Official Gazette, specify for the purpose of being floated by (a) public sector companies engaged in providing long-term finance for construction or

worksaccounts.com

purchase of houses in India for residential purposes, or, (b) any authority constituted in India by, or, under any law, enacted either for the purpose of dealing with and satisfying the need for housing accommodation or for the purpose of planning, development or improvement of cities, towns and villages, or for both.

[The Central Government has since notified the Public Deposit Scheme of HUDCO vide Notification S.O. No.37(E), dated 11.01.2007, for the purposes of Section 80C(2)(xvi)(a)].

(12) Any sums paid by an assessee for the purpose of purchase or construction of a residential house property, the income from which is chargeable to tax under the head "Income from house property" (or which would, if it has not been used for assessee's own residence, have been chargeable to tax under that head) where such payments are made towards or by way of any installment or part payment of the amount due under any self-financing or other scheme of any Development Authority, Housing Board etc.

The deduction will also be allowable in respect of re-payment of loans borrowed by an assessee from the Government, or any bank or Life Insurance Corporation, or National Housing Bank, or certain other categories of institutions engaged in the business of providing long term finance for construction or purchase of houses in India. Any repayment of loan borrowed from the employer will also be covered, if the employer happens to be a public company, or a public sector company, or a university established by law, or a college affiliated to such university, or a local authority, or a cooperative society, or an authority, or a board, or a corporation, or any other body established under a Central or State Act.

The stamp duty, registration fee and other expenses incurred for the purpose of transfer shall also be covered. Payment towards the cost of house property, however, will not include, admission fee or cost of share or initial deposit or the cost of any addition or alteration to, or, renovation or repair of the house property which is carried out after the issue of the completion certificate by competent authority, or after the occupation of the house by the assessee or after it has been let out. Payments towards any expenditure in respect of which the deduction is allowable under the provisions of section 24 of the Act will also not be included in payments towards the cost of purchase or construction of a house property.

Where the house property in respect of which deduction has been allowed under these provisions is transferred by the tax-payer at any time before the expiry of five years from the end of the financial year in which possession of such property is obtained by him or he receives back, by way of refund or otherwise, any sum specified in section 80C(2)(xviii), no deduction under these provisions shall be allowed in respect of such sums paid in such previous year in which the transfer is made and the aggregate amount of deductions of income so allowed in the earlier years shall be added to the total income of the assessee of such previous year and shall be liable to tax accordingly.

(13) Tuition fees, whether at the time of admission or thereafter, paid to any university, college, school or other educational institution situated in India, for the purpose of full-time education of any two children of the employee.

Full-time education includes any educational course offered by any university, college, school or other educational institution to a student who is enrolled full-time for the said course. It is also clarified that full-time education includes play-school activities, pre-nursery and nursery classes.

worksaccounts.com

It is clarified that the amount allowable as tuition fees shall include any payment of fee to any university, college, school or other educational institution in India except the amount representing payment in the nature of development fees or donation or capitation fees or payment of similar nature.

(14) Subscription to equity shares or debentures forming part of any eligible issue of capital made by a public company, which is approved by the Board or by any public finance institution.
(15) Subscription to any units of any mutual fund referred to in clause (23D) of Section 10 and approved by the Board, if the amount of subscription to such units is subscribed only in eligible issue of capital of any company.
(16) Investment as a term deposit for a fixed period of not less than five years with a scheduled bank, which is in accordance with a scheme framed and notified by the Central Government, in the Official Gazette for these purposes.

[The Central Government has since notified the Bank Term Deposit Scheme, 2006 for this purpose vide Notification S.O. No. 1220(E) dated 28.7.2006]
(17) Subscription to such bonds issued by the National Bank for Agriculture and Rural Development, as the Central Government may, by such notification in the Official Gazette, specify in this behalf.
(18) Any investment in an account under the Senior Citizens Savings Scheme Rules, 2004.
(19) Any investment as five year time deposit in an account under the Post Office Time Deposit Rules, 1981.
(20) From financial year 2019-20, any contribution by employee of the Central Government to a specified account of the pension scheme referred to in section 80CCD —

(a) for a fixed period of not less than three years; and

(b) which is in accordance with the scheme as may be notified by the Central Government in the Official Gazette for the purposes of this clause.

Explanation.—For the purposes of this clause, "specified account" means an additional account referred to in sub-section (3) of section 20 of the Pension Fund Regulatory and Development Authority Act, 2013 (23 of 2013).

B. Section 80C(3) & 80C(3A) states that in case of Insurance Policy other than contract for a deferred annuity the amount of any premium or other payment made is restricted to:

Policy issued before 1st April 2012	20% of the actual capital sum Assured
Policy issued on or after 1st April 2012	10% of the actual capital sum Assured
Policy issued on or after 1st April 2013 * - In cases of persons with disability or person with severe disability as per Sec 80 U or suffering from disease or ailment as specified in rules made under Sec 80DDB	15% of the actual capital sum assured

*Introduced by Finance Act 2013

Actual capital sum assured in relation to a life insurance policy means the minimum amount assured under the policy on happening of the insured event at any time during the term of the policy, not taking into account –

i. the value of any premium agreed to be returned, or
ii. any benefit by way of bonus or otherwise over and above the sum actually assured which may be received under the policy by any person.

worksaccounts.com

5.5.2 Deduction in respect of contribution to certain pension funds (Section 80CCC)

Section 80CCC allows an employee deduction of an amount paid or deposited out of his income chargeable to tax to effect or keep in force a contract for any **annuity plan of Life Insurance Corporation of India or any other insurer for receiving pension** from the Fund referred to in section 10(23AAB). However, the deduction shall exclude interest or bonus accrued or credited to the employee's account, if any and shall not exceed Rs. 1,50,000.However, if any amount is standing to the credit of the employee in the fund referred to above and deduction has been allowed as stated above and the employee or his nominee receives this amount together with the interest or bonus accrued or credited to this account due to the reason of

(i) Surrender of annuity plan whether in whole or part
(ii) Pension received from the annuity plan

then the amount so received during the Financial Year shall be the income of the employee or his nominee for that Financial Year and accordingly will be charged to tax.

Where any amount paid or deposited by the employee has been taken into account for the purposes of this section, a deduction with reference to such amount shall not be allowed under section 80C.

5.5.3 Deduction in respect of contribution to pension scheme of Central Government (Section 80CCD):

Section 80CCD(1) allows an employee, being an individual employed by the Central Government on or after 01.01.2004 or being an individual employed by any other employer, or any other assessee being an individual, a deduction of an amount paid or deposited out of his income chargeable to tax under a pension scheme as notified vide Notification F. N. 5/7/2003- ECB&PR dated 22.12.2003 National Pension System-NPS or as may be notifed by the Central Government. However, the deduction shall not exceed an amount equal to 10% of his salary (includes Dearness Allowance but excludes all other allowance and perquisites).

As per section 80CCD(1B), an assessee referred to in 80CCD(1) shall be allowed an deduction in computation of his income, of the whole of the amount paid or deposited in the previous year in his account under the pension scheme notified or as may be notified by the Central Government, which shall not exceed Rs. 50,000. The deduction of Rs. 50,000 shall be allowed whether or not any deduction is allowed under sub-section(1). However, the same amount cannot be claimed both under sub-section (1) and sub-section (1B) of section 80CCD.

As per Section 80CCD(2), where any contribution in the said pension scheme is made by the Central Government or any other employer then the employee shall be allowed a deduction from his total income of the whole amount contributed by the Central Government or any other employer subject to limit of 10% [increased to 14% from financial year 2019-20 if the amount is contributed by the Central Government] of his salary.

Subject to provisions of section 10 (12A) and section 10 (12B) discussed in para 5.3.7, if any amount is standing to the credit of the employee in the pension scheme referred above and deduction has been allowed as stated above, and the employee or his nominee receives this amount together with the amount accrued thereon, due to the reason of

(i) Closure or opting out of the pension scheme or

worksaccounts.com

(ii) Pension received from the annuity plan purchased and taken on such closure or opting out then the amount so received during the FYs shall be the income of the employee or his nominee for that Financial Year and accordingly will be charged to tax.

Further, the amount received by the nominee, on the death of the assessee, on closure or opening of the pension not be deemed to be the income of the nominee.Where any amount paid or deposited by the employee has been taken into account for the purposes of this section, a deduction with reference to such amount shall not be allowed under section 80C.

Further, it has been specified that w.e.f 01.04.09 any amount received by the employee from the New Pension Scheme shall be deemed not to have been received in the previous year if such amount is used for purchasing an annuity plan in the same previous year.

It is emphasized that as per the **section 80CCE the aggregate amount of deduction under sections 80C, 80CCC and Section 80CCD(1) shall not exceed Rs.1,50,000/-. The deduction allowed under section 80 CCD(1B) is an additional deduction in respect of any amount paid in the NPS upto Rs. 50,000/-. However, the contribution made by the Central Government or any other employer to a pension scheme u/s 80CCD(2) shall be excluded from the limit of Rs.1,50,000/- provided under this section.**

5.5.4 Deduction in respect of investment made under an equity savings scheme (Section 80 CCG):

Section 80CCG provides deduction wef assessment year 2013-14 in respect of investment made under notified equity saving scheme. **Rajiv Gandhi Equity Savings Scheme** 2012 has been notified vide SO No 2777 E, dated 23.11.2012 (subsequent corrigendum SO NO. 2835E dated 05.12.2012) and amended vide notification SO No. 3693E dated 18.12.2013 as a scheme under this section. The scheme was modified in December 2013 vide notification SO 3693 dated 18.12.13 (RGESS, 2013). The deduction under this section in accordance with RGESS 2013 is available if following conditions are satisfied:

(a) The assessee is a resident individual
(b) His gross total income does not exceed Rs. 12 lakhs;
(c) He has acquired listed shares in accordance with a notified scheme or listed units of an equity oriented fund as defined in section 10(38);
(d) The assessee is a new retail investor;
(e) The investment is locked-in for a period of 3 years from the date of acquisition in accordance with the above scheme;
(f) The assessee satisfies any other condition as may be prescribed.

Amount of deduction –The amount of deduction is at 50% of the amount invested in equity shares/units. However, the amount of deduction under this provision cannot exceed Rs. 25,000.

Withdrawal of deduction – If the assessee, after claiming the aforesaid deduction, fails to satisfy the above conditions, the deduction originally allowed shall be deemed to be the income of the assessee of the year in which default is committed.

This deduction is allowed for three consecutive assessment years beginning with the AY in which the listed equity shares or units were first acquired. If any deduction is claimed by a taxpayer under this section in any year, he shall not be entitled to any deduction under this section for any other year.

The deduction under this section for F.Y. 2018-19 shall be allowed to an employee who has

worksaccounts.com

claimed deduction under this section for F.Y 2016-17 if he is otherwise eligible to claim deduction as per provisions of this sections.

5.5.5 Deduction in respect of health insurance premia paid, etc. (Section 80D)

Particulars	Case-1		Case-2		Case-3	
	Self & Family (*no one of them is a senior citizen*)	**Parents (no one of them is a senior citizen)**	**Self & Family (no one of them is a senior citizen)**	**Parents (atleast one of them is a senior citizen)**	**Self & Family (atleast one of them is a senior citizen)**	**Parents (atleast one of them is a senior citizen)**
Medical Insurance, etc.*	25,000	25,000	25,000	50,000	50,000	50,000
Medical Expenditure**	--	--	--	50,000	50,000	50,000
Maximum deduction allowable	25,000	25,000	25,000	50,000	50,000	50,000
Aggregate amount of deduction allowable under section 80D	**50,000**		**75,000**		**1,00,000**	

* Includes (i) contribution to the Central Government Health Scheme/notified scheme for self & family; and (ii) amount paid for preventive health check-up up to Rs. 5,000/-.
** Allowable only if no amount is paid for medical insurance.
Note 1 : The payment for preventive health check-up can only be made in cash, other payments must be made by non-cash mode.
Note 2 : Finance Act, 2018 amended section 80D of the Act to provide that in case of single premium health insurance policy having cover of more than one year, the deduction shall be allowed on proportionate basis for the number of years for which health insurance cover is provided, subject to the monetary limits specified above.

Here

i) "Family" means the spouse and dependent children of the employee.

ii) **"Senior citizen"** means an individual **resident** in India who is of the age of **sixty years** or more at any time during the relevant previous year.

The DDO must ensure that the medical insurance referred to above shall be in accordance with a scheme made in this behalf by-

(a) the General Insurance Corporation of India formed under section 9 of the General Insurance Business (Nationalization) Act, 1972 and approved by the Central Government in this behalf; or

(b) any other insurer and approved by the Insurance Regulatory and Development Authority established under sub-section (1) of section 3 of the Insurance Regulatory and

worksaccounts.com

Development Authority Act, 1999.

(II) Lump sum payment of health insurance premium

In case, a lump sum amount is paid to effect or to keep in force an insurance on health for more than a year, proportionate deduction (appropriate fraction) will be allowable for the year in which it was paid and for subsequent year/years in accordance with sub- section (4A) of Section 80D.

5.5.6 Deductions in respect of expenditure on persons or dependants with disability

5.5.6.1 Deductions in respect of maintenance including medical treatment of a dependent who is a person with disability (section 80DD):

Under **section 80DD**, where an employee, who is a resident in India, has, during the previous year-

(a) incurred any **expenditure for the medical treatment (including nursing), training and rehabilitation of a dependant, being a person with disability**; or

(b) paid or deposited any amount under a scheme framed in this behalf by the Life Insurance Corporation or any other insurer or the Administrator or the specified company subject to the conditions specified in this regard and approved by the Board in this behalf for the maintenance of a dependant, being a person with disability, the employee shall be allowed a deduction of a sum of Rs 75,000/- from his gross total income of that year.

However, where such dependant is a person with severe disability, an amount Rs 1,25,000/- shall be allowed as deduction subject to the specified conditions.

The deduction under (b) above shall be allowed only if the following conditions are fulfilled:-

(i) the scheme referred to in (b) above provides for payment of annuity or lump sum amount for the benefit of a dependant, being a person with disability, in the event of the death of the individual in whose name subscription to the scheme has been made;

(ii) the employee nominates either the dependant, being a person with disability, or any other person or a trust to receive the payment on his behalf, for the benefit of the dependant, being a person with disability.

However, if the dependant, being a person with disability, predeceases the employee, an amount equal to the amount paid or deposited under sub-para(b) above shall be deemed to be the income of the employee of the previous year in which such amount is received by the employee and shall accordingly be chargeable to tax as the income of that previous year.

5.5.6.2 Deductions in respect of a person with disability (section 80U):

Under **section 80U**, in computing the total income of an individual, being a resident, who, at any time during the previous year, is certified by the medical authority to be a **person with disability**, there shall be allowed a deduction of a sum of Rs 75,000/-. However, where such individual is a person with **severe disability**, a higher deduction of Rs 1,25,000/- shall be allowable.

DDOs should note that 80DD deduction is in case of the dependent of the employee whereas 80U deduction is in case of the employee himself. However, under both the sections, the employee **shall** furnish to the DDO the following:

worksaccounts.com

1. A copy of the certificate issued by the medical authority as defined in Rule 11A(1) in the prescribed form as per Rule 11A(2) of the Rules. The DDO has to allow deduction only after seeing that the Certificate furnished is from the Medical Authority defined in this Rule and the same is in the form as mentioned therein.

2. Further in cases where the condition of disability is temporary and requires reassessment of its extent after a period stipulated in the aforesaid certificate, no deduction under this section shall be allowed for any subsequent period **unless a new certificate** is obtained from the medical authority as in 1 above and furnished before the DDO.

3. For the purposes of sections 80DD and 80 U some of the terms defined are as under:-

(a) "Administrator" means the Administrator as referred to in clause (a) of section 2 of the Unit Trust of India (Transfer of Undertaking and Repeal) Act, 2002;

(b) "dependant" means—

(i) in the case of an individual, the spouse, children, parents, brothers and sisters of the individual or any of them;

(ii) in the case of a Hindu undivided family, a member of the Hindu undivided family, dependant wholly or mainly on such individual or Hindu undivided family for his support and maintenance, and who has not claimed any deduction under section 80U in computing his total income for the assessment year relating to the previous year;

(c) "disability" shall have the meaning assigned to it in clause (i) of section 2 of the Persons with Disabilities (Equal Opportunities, Protection of Rights and Full Participation) Act, 1995 and includes "autism", "cerebral palsy" and "multiple disability" referred to in clauses (a), (c) and (h) of section 2 of the National Trust for Welfare of Persons with Autism, Cerebral Palsy, Mental Retardation and Multiple Disabilities Act, 1999;

(d) "Life Insurance Corporation" shall have the same meaning as in clause (iii) of sub-section (8) of section 88;

(e) "medical authority" means the medical authority as referred to in clause (p) of section 2 of the Persons with Disabilities (Equal Opportunities, Protection of Rights and Full Participation) Act, 1995 or such other medical authority as may, by notification, be specified by the Central Government for certifying "autism", "cerebral palsy","multiple disabilities", "person with disability" and "severe disability" referred to in clauses (a), (c), (h), (j) and (o) of section 2 of the National Trust for Welfare of Persons with Autism, Cerebral Palsy, Mental Retardation and Multiple Disabilities Act, 1999;

(f) "person with disability" means a person as referred to in clause (t) of section 2 of the Persons with Disabilities (Equal Opportunities, Protection of Rights and Full Participation) Act, 1995 or clause (j) of section 2 of the National Trust for Welfare of Persons with Autism, Cerebral Palsy, Mental Retardation and Multiple Disabilities Act, 1999;

(g) "person with severe disability" means—

(i) a person with eighty per cent or more of one or more disabilities, as referred to in sub-section (4) of section 56 of the Persons with Disabilities (Equal Opportunities, Protection *of Rights and Full Participation) Act, 1995; or*

(ii) a person with severe disability referred to in clause (o) of section 2 of the National Trust for Welfare of Persons with Autism, Cerebral Palsy, Mental Retardation and Multiple Disabilities Act, 1999;

worksaccounts.com

(h) "specified company" means a company as referred to in clause (h) of section 2 of the Unit Trust of India (Transfer of Undertaking and Repeal) Act, 2002.

5.5.7. Deduction in respect of medical treatment, etc. (Section 80DDB):

Section **80DDB** allows a deduction in case of employee, who is resident in India, during the previous year, of any amount actually paid for the medical treatment of such disease or ailment as may be specified in the rules 11DD (1) for himself or a dependant. The deduction allowed is equal to the amount actually paid is in respect of the employee or his dependant or Rs. 40,000 whichever is less.

Now the deduction can be allowed on the basis of a prescription from an oncologist, a urologist, nephrologist, a haematologist, an immunologist or such other specialist, as mentioned in Rule 11DD. However, the amount of the claim shall be reduced by the amount if any received from the insurer or reimbursed by the employer. Further in case of the person against whom such claim is made is a senior citizen (60 age years or more) then the deduction up to one lakh rupees is allowed

For the purpose of this section, in the case of an employee, "dependant" means individual, the spouse, children, parents, brothers and sisters of the employee or any of them, dependant wholly or mainly on the employee for his support and maintenance.

Vide Notification SO No. 2791(E) dated 12.10.2015, Rules 11DD has been amended to do away with the requirement of furnishing a certificate in Form 10-I. A prescription from a specialist as specified in the Rules containing the name and age the patient, name of the disease/ailment along with the name, address, registration number & qualification of the specialist issuing the prescription would now be required.

5.5.8 Deduction in respect of interest on loan taken for higher education (Section 80E):

Section 80E allows deduction in respect of payment of interest on loan taken from any financial institution or any approved charitable institution for higher education for the purpose of pursuing his higher education or for the purpose of higher education of his spouse or his children or the student for whom he is the legal guardian.

The deduction shall be allowed in computing the total income for the Financial year in which the employee starts paying the interest on the loan taken and immediately succeeding seven Financial years or until the Financial year in which the interest is paid in full by the employee, whichever is earlier.
For the purpose of this section -

(a) "approved charitable institution" means an institution established for charitable purposes and approved by the prescribed authority section 10(23C), or an institution referred to in section 80G(2)(a);
(b) "financial institution" means a banking company to which the Banking Regulation Act, 1949 applies (including any bank or banking institution referred to in section 51 of that Act); or any other financial institution which the Central Government may, by notification in the Official Gazette, specify in this behalf;
(c) "higher education" means any course of study pursued after passing the Senior Secondary Examination or its equivalent from any school, board or university recognized by the Central Government or State Government or local authority or by any other authority authorized by the Central Government or State Government or local authority to do so;

worksaccounts.com

5.5.9 Deduction in respect of interest on loan taken for certain house property (Section 80EEA):

Section 80EEA introduced by the Finance (No.2) Act, 2019 (No. 23 of 2019), allows deduction from gross total income of an individual (not eligible to claim deduction under section 80EE) in respect of the interest payable on loan taken by him from any financial institution for the purpose of acquisition of a residential house property if following conditions are met:-

(i) the loan has been sanctioned by the financial institution during the period beginning on the 1st day of April, 2019 and ending on the 31st day of March, 2021;
(ii) the stamp duty value of residential house property does not exceed forty-five lakh rupees;
(iii) the assessee does not own any residential house property on the date of sanction of loan.
For the purposes of this section,—
(a) the expression "financial institution" shall have the meaning assigned to it in clause (a) of sub-section (5) of section 80EE;
(b) the expression "stamp duty value" means value adopted or assessed or assessable by any authority of the Central Government or a State Government for the purpose of payment of stamp duty in respect of an immovable property.

The amount of this deduction shall not exceed Rs. 1,50,000/- and it shall be allowed in computing the total income of the individual for the assessment year 2020-21 and subsequent assessment years.
Where a deduction under this section is allowed for any interest referred to in this section, no deduction shall be allowed in respect of such interest under any other provision of this Act for the same or any other assessment year.

5.5.10 80EEB

Section 80EEB introduced by the Finance (No.2) Act, 2019 (No. 23 of 2019), allows deduction from gross total income of an individual in respect of the interest payable on loan taken by him from any financial institution for the purpose of purchase of an electric vehicle if the loan has been sanctioned by the financial institution during the period from 01.04.2019 to 31.03.2023.
For the purposes of this section,—
(a) "electric vehicle" means a vehicle which is powered exclusively by an electric motor whose traction energy is supplied exclusively by traction battery installed in the vehicle and has such electric regenerative braking system, which during braking provides for the conversion of vehicle kinetic energy into electrical energy;
(b) "financial institution" means a banking company to which the Banking Regulation Act, 1949 (10 of 1949) applies, or any bank or banking institution referred to in section 51 of that Act and includes any deposit taking non-banking financial company or a systemically important non-deposit taking non-banking financial company as defined in clauses (e) and (g) of Explanation 4 to section 43B.
The amount of this deduction shall not exceed Rs. 1,50,000/- and it shall be allowed in computing the total income of the individual for the assessment year 2020-21 and

worksaccounts.com

subsequent assessment years.

Where a deduction under this section is allowed for any interest referred to in this section, no deduction shall be allowed in respect of such interest under any other provision of this Act for the same or any other assessment year.

5.5.11 Deductions on respect of donations to certain funds, charitable institutions, etc., (Section 80G):

Section 80G provides for deductions on account of donation made to various funds , charitable organizations etc. In cases where employees make donations to the Prime Minister's National Relief Fund, the Chief Minister's Relief Fund or the Lieutenant Governor's Relief Fund through their respective employers, it is not possible for such funds to issue separate certificate to every such employee in respect of donations made to such funds as contributions made to these funds are in the form of a consolidated cheque. An employee who makes donations towards these funds is eligible to claim deduction under section 80G. It is, hereby, clarified that the claim in respect of such donations as indicated above will be admissible under section 80G on the basis of the certificate issued by the Drawing and Disbursing Officer (DDO)/Employer in this behalf - Circular No. 2/2005, dated 12-1-2005.

No deduction under this section is allowable in case the amount of donation exceeds Rs 2000/- unless the amount is paid by any mode other than cash.

5.5.12 Deductions is respect of rents paid (Section 80GG):

Section 80GG allows the employee to a deduction in respect of **house rent paid by him for his own residence**. Such deduction is permissible subject to the following conditions :-

(a) the employee has not been in receipt of any House Rent Allowance specifically granted to him which qualifies for exemption under section 10(13A) of the Act;
(b) the employee files the declaration in Form No.10BA. **(Annexure X)**
(c) The employee does not own:

(i) any residential accommodation himself or by his spouse or minor child or where such employee is a member of a Hindu Undivided Family, by such family, at the place where he ordinarily resides or performs duties of his office or carries on his business or profession; or
(ii) at any other place, any residential accommodation which is in the occupation of the employee, the value of which is to be determined under section 23(2)(a) or section 23(4)(a), as the case may be.

(d) He will be entitled to a deduction in respect of house rent paid by him in excess of 10% of his total income. The deduction shall be equal to 25% of total income or Rs. 5,000/- per month, whichever is less. The total income for working out these percentages will be computed before making any deduction under section 80GG.

The Drawing and Disbursing Authorities should satisfy themselves that all the conditions mentioned above are satisfied before such deduction is allowed by them to the employee. They should also satisfy themselves in this regard by insisting on production of evidence of actual payment of rent.

5.5.13 Deductions in respect of certain donations for scientific research or rural development (Section 80 GGA):

Section 80GGA allows deduction from total income of employee in respect of donations of any sum as given in the Table below:

worksaccounts.com

Sl No	Donations made to persons	Approval / Notification under Section	Authority granting approval/Notification
1	A research association which has as its object the undertaking of scientific research or to a University, college or other institution to be used for scientific research	u/s 35(1)(ii)	Central Government
2	A research association which has as its object the undertaking of research in social science or statistical research or to a University, college or other institution to be used for research in social science or statistical research	u/s 35(1)(iii)	Central Government
3	an association or institution, which has as its object the undertaking of any programme of rural development, to be used for carrying out any programme of rural development approved for the purposes of section 35CCA	furnishes the certificate u/s 35CCA (2)	Prescribed Authority under Rule 6AAA
4	an association or institution which has as its object the training of persons for implementing programmes of rural development.	furnishes the certificate u/s 35CCA (2A)	Prescribed Authority under Rule 6AAA
5	a public sector company or a local authority or to an association or institution approved by the National Committee, for carrying out any eligible project or scheme.	furnishes the certificate u/s 35AC(2)(a)	National Committee for Promotion of Social & Economic Welfare
7	a rural development fund	notified u/s 35CCA (1)(c)	set up and notified by the Central Government
8	National Urban Poverty Eradication Fund	notified u/s 35CCA (1)(d)	set up and notified by the Central Government

No deduction under this section is allowable in case:

i) The employee has gross total income which includes income which is chargeable under the head "Profits and gains of business or profession".
ii) The amount of donation exceeds Rs 10000 and is paid in cash. W.e.f. 01.06.2020 if the amount of donation exceeds Rs. 2000 and is paid in cash.

The Drawing and Disbursing Authorities should satisfy themselves that all the conditions mentioned above are satisfied before such deduction is allowed by them to the employee. They should also satisfy themselves in this regard by insisting on production of evidence of actual payment of donation and a receipt from the person to whom donation has been made and ensure that the approval/notification has been issued by the right authority. DDO must ensure a self-declaration from the employee that he has no income from "Profits and gains of business or profession".

5.5.14 Deduction in respect of interest on deposits in savings account (Section 80TTA):

Section 80TTA allows to an employee, not being a senior citizen employee, from his gross total income if it includes any income by way of interest on deposits (not being time deposits) in a savings account, a deduction amounting to:

(i) in a case where the amount of such income does not exceed in the aggregate ten

worksaccounts.com

thousand rupees, the whole of such amount; and

(ii) in any other case, ten thousand rupees.

The deduction is available if such savings account is maintained in a

(a) banking company to which the Banking Regulation Act, 1949, applies (including any bank or banking institution referred to in section 51 of that Act);
(b) co-operative society engaged in carrying on the business of banking (including a co-operative land mortgage bank or a co-operative land development bank); or
(c) Post Office as defined in clause (k) of section 2 of the Indian Post Office Act, 1898.

For this section, "time deposits" means the deposits repayable on expiry of fixed periods.

5.5.15 Deduction in respect of interest on deposits in case of senior citizens (Section 80TTB):

Section 80TTB introduced by Finance Act, 2018 allows deduction to a senior citizen from his gross total income in respect of income by way of interest on deposits with –

(a) banking company to which the Banking Regulation Act, 1949, applies (including any bank or banking institution referred to in section 51 of that Act);

(b) co-operative society engaged in carrying on the business of banking (including a co-operative land mortgage bank or a co-operative land development bank); or

(c) a Post Office as defined in clause (k) of section 2 of the Indian Post Office Act, 1898.

The amount of deduction in respect of above interest on deposit is as under:-

(i) in a case where the amount of such income does not exceed in the aggregate fifty thousand rupees, the whole of such amount; and

(ii) in any other case, fifty thousand rupees.

However, no deduction is allowed under section 80TTB to any partner of the firm or any member of the association or any individual of the body if said interest is derived from any deposit held by, or on behalf of, a firm, an association of persons or a body of individuals.

For this purpose, "senior citizen"means an individual resident in India who is of the age of sixty years or more at any time during the relevant previous year.

However, taxpayers claiming deduction under section 80TTB shall not be eligible for deduction under section 80TTA.

worksaccounts.com

6. REBATE OF Rs12500 FOR INDIVIDUALS HAVING TOTAL INCOME UPTO Rs 5 LAKH [SECTION 87A]

Finance Act, 2019(No.7 of 2019) provided relief in the form of rebate to individual taxpayers, resident in India, who are in lower income bracket, i. e. having total income not exceeding Rs 5,00,000/-. The amount of rebate available under section 87A is Rs 12,500/- or the amount of tax payable, whichever is less from financial year 2019-20.

7 TDS ON PAYMENT OF ACCUMULATED BALANCE UNDER RECOGNISED PROVIDENT FUND AND CONTRIBUTION FROM APPROVED SUPERANNUATION FUND:

7.1 The trustees of a Recognized Provident Fund, or any person authorized by the regulations of the Fund to make payment of accumulated balances due to employees, shall in cases where sub-rule(1) of Rule 9 of Part A of the Fourth Schedule to the Act applies, at the time when the accumulated balance due to an employee is paid, make therefrom the deduction specified in Rule 10 of Part A of the Fourth Schedule to the Act.

The accumulated balance is treated as income chargeable under the head "Salaries".

7.2 Where any contribution made by an employer, including interest on such contributions, if any, in an approved Superannuation Fund is paid to the employee, tax on the amount so paid shall be deducted by the trustees of the Fund to the extent provided in Rule 6 of Part B of the Fourth Schedule to the Act. TDS should be at the average rate of tax at which, the employee was liable to be taxed during the preceding three years or during the period, if that period is less than three years, when he was member of the fund.

The deductor shall remain liable to deduct tax on any sum paid on account of returned contributions (including interest, if any) even if a fund or part of a fund ceases to be an approved Superannuation fund.

7.3 As per section 192A of the Act, w. e. f. 01.06.2015 the trustees of the EPF Scheme 1952 framed under section 5 of the EPF & Misc. Provisions Act, 1952 or any person authorized under the scheme to make payment of accumulated balance due to employees, shall, in a case where the accumulated balance due to an employee participating in a recognized provident fund is includible in his total income owing to the provisions of Rule 8 of Part A of Fourth Schedule not being applicable at the time of payment of accumulated balance due to the employee, deduct income tax thereon @ 10% if the amount of such payment or aggregate of such payment exceeds Rs 50,000/-. In case the employee does not provide his/her PAN or Aadhaar number as the case may be, or provides an invalid PAN or Aadhaar number as the case may be, then the deduction will have to be made at maximum marginal rate.

The Rule-8 of Part-A of fourth schedule excludes the following accumulated balance due and becoming payable to the employee from the total income;

(i) If, he has rendered continuous service with his employer for a period of five years or more, or

(ii) If, though he has not rendered such continuous service, the service has been terminated by reason of -
- the employees ill health, or
- by the contraction or discontinuance of the employer's business or

worksaccounts.com

- other cause beyond the control of employee, or

(iii) if, on cessation of his employment, the employee obtains employment with any other employer, to the extent amount of such accumulated balance is transferred to his individual account in any recognized provident fund maintained by such other employer, or

(iv) if the entire balance standing to the credit of employee is transferred to his account under a pension scheme referred to in section 80 CCD and notified by the central Government.

When the accumulated balance due and becoming payable to an employee includes any amount transferred from his individual account in any other recognized provident fund(s) maintained by his former employer(s), then in computing the period of continuous service the period or periods of continuous services rendered under former employer(s) shall be counted for the purposes of (i) and (ii) above.Under the above four situations at (i) to (iv), the accumulated balance due and payable to the employee is not liable for TDS under section 192 A.

8. DDOs TO OBTAIN EVIDENCE/PROOF OF CLAIMS:

For the purpose of estimating income of the assesse or computing tax deductions, section 192(2D) provides that person responsible for paying (DDOs) shall obtain from the assessee evidence or proof or particular of claims such as House rent Allowance (where aggregate annual rent exceeds one lakh rupees); Deduction of interest under the head "Income from house property" and deduction under Chapter VI-A as per the prescribed form 12BB laid down by Rule 26C of the Rules.

Further, as per section 192 (2D) read with the rule 26C, it is mandatory for the DDOs to obtain details/evidence in respect of claim of exemption for leave travel concession or assistance before allowing the said exemption. The relevant form for furnishing details by employee is Form 12BB.

It may be noted that the DDOs shall allow income-tax exemption as referred to in Para 5.3.1 after obtaining copies of invoices of specified expenditure incurred during the specified period.

9. CALCULATION OF INCOME-TAX TO BE DEDUCTED:

9.1 Salary income for the purpose of section 192 shall be computed as follow:-

a) First compute the gross salary as mentioned in para 5.1 including all the incomes mentioned in para 5.2 and excluding the income mentioned in para 5.3.
b) Allow deductions mentioned in para 5.4 from the figure arrived at (a) above and compute the amount to arrive at Net salary of the employee
c) Add income from all other heads- "House property", "Profits & gains of Business or Profession", Capital gains and Income from other Sources to arrive at the Gross Total Income as shown in the form of simple statement mentioned para 3.5. However it may be remembered that no loss under any such head is allowable by DDO other than loss under the Head "Income from House property" to the extent of Rs. 2.00 lakh.

worksaccounts.com

d) Allow deductions mentioned in para 5.5 from the figure arrived at (c) above ensuring that the relevant conditions are satisfied. The aggregate of the deductions subject to the threshold limits mentioned in para 5.5 shall not exceed the amount at (b) above and if it exceeds, it should be restricted to that amount.

This will be the amount of total income of the employee on which income tax would be required to be deducted. This income should be rounded off to the nearest multiple of ten rupees.

9.2 Income-tax on such income shall be calculated at the rates given in para 2.1 of this Circular keeping in view the age of the employee and subject to the provisions of sec. 206AA, as discussed in para 4.8. Rebate as per Section 87A up to Rs 12,500/- to eligible persons (see para 6) may be given. Surcharge shall be calculated in cases where applicable (see para 2.2).

9.3 The amount of tax as increased by the surcharge if applicable so arrived at shall be increased by Health and Education Cess at the rate of 4% to arrive at the total tax payable.

9.4 The amount of total tax payable as arrived at para 9.3 should be deducted every month in equal installments. Any excess or deficit arising out of any previous deduction can be adjusted by increasing or decreasing the amount of subsequent deductions during the same financial year.

10. MISCELLANEOUS:

10.1 These instructions are not exhaustive and are issued only with a view to guide the employers to understand the various provisions relating to deduction of tax from salaries. Wherever there is any doubt, reference may be made to the provisions of the Income-tax Act, 1961, the Income-tax Rules, 1962, the Finance Act,2020 (No. 12 of 2020), the Taxation and Other Laws (Relaxation and Amendment of Certain Provisions) Act, 2020(No. 38 of 2020), the relevant circulars / notifications, etc.

10.2 In case any assistance is required, the Assessing Officer/the Local Public Relation Officer of the Income-tax Department may be contacted.

10.3 These instructions may be brought to the notice of all Disbursing Officers and Undertakings including those under the control of the Central/ State Governments.

10.4 Copies of this Circular are available at the following websites:

www.finmin.nic.in & www.incometaxindia.gov.in

Hindi version will follow.

(Mahesh Kumar)
Director (IT-budget), CBDT

Copy to

1. All State Governments/Union Territories.
2. All Ministries/Departments of Government of India etc.
3. President's Secretariat
4. Vice-President's Secretariat
5. Prime Minister's Office
6. Lok Sabha Secretariat

worksaccounts.com

7. Rajya Sabha Secretariat
8. Cabinet Secretariat
9. Secretary, U.P.S.C., Dholpur House, New Delhi
10. Secretary, Staff Selection Commission, Lodhi Complex, New Delhi
11. Supreme Court of India, New Delhi
12. Election Commission, New Delhi
13. Planning Commission, New Delhi
14. Secretariat of Governors/Lt. Governors of all States/Union Territories
15. All Integrated Financial Advisors to Ministries/Departments of Government of India
16. All Heads of Departments & Offices subordinate to the Department of Revenue CBDT, CBEC
17. Army Headquarters, New Delhi
18. Air Headquarters, New Delhi
19. Naval Headquarters, New Delhi
20. Director-General of Posts & Telegraphs, New Delhi
21. Comptroller & Auditor General of India
22. Accountant Generals of all State Governments
23. Director of Audit(Central)Kolkata, New Delhi, Mumbai.
24. All Banks (Public Sector, Nationalized including State Bank of India)
25. Secretary, Reserve Bank of India Central Office P.B.No.406, Mumbai-400001 (25 copies for distribution to its Branches).
26. Accounts Officer, Inspector General of Assam Rifles, (Hqrs), Shillong
27. All Chambers of Commerce & Industry
28. Lok Sabha /Rajya Sabha Secretariat Libraries(15 copies each)
29. All Officers and Sections in Technical Wing of CBDT
30. Asstt. Chief Inspector, RBI Inspection Deptt. Regional Cell Mumbai/Kolkata/ Chennai/New Delhi/and Kanpur.
31. Controller of Accounts, Deptt. Of Economic Affairs, New Delhi
32. Manager, Reserve Bank of India, Public Debt Office, Ahmedabad/Bengaluru/ Bhubaneswar/ Mumbai/Kolkata/Hyderabad/Kanpur/Jaipur/Chennai/Nagpur/New Delhi/ Patna/ Guwahati/Trivandrum.
33. Controller General of Defence Accounts, New Delhi.
34. Directorate of Audit, Defence Services, New Delhi.
35. National Saving Organisation, Nagpur.
36. Deputy Accountant General, Post & Telegraph, Kolkata.
37. The Legal Adviser, Export-Import Bank of India, P.B.No.19969, umbai.4000021.
38. Chief Controller of Accounts, CBDT, Lok Nayak Bhawan, Khan Market, New Delhi
39. N. S. Branch, Department of Economic Affairs, New Delhi
40. The Min. of Law (Deptt. of Legal Affairs), Shastri Bhawan New Delhi.
41. All Foreign Banks operating in India
42. Air India, New Delhi
43. University Grants Commission, Bahadur Shah Jafar Marg, New Delhi

(Mahesh Kumar)
Director (IT-budget), CBDT

worksaccounts.com

ANNEXURE-I

SOME ILLUSTRATIONS#

Example 1

For Assessment Year 2021-22

(A) Calculation of Income tax in the case of an employee (Male or Female) below the age of sixty years and having gross salary income of:

i) Rs.2,50,000/- ,
ii) Rs.6,00,000/- ,
iii) Rs.10,50,000/-
iv) Rs.55,50,000/-. and
v) Rs. 1,10,50,000/-

(B) What will be the amount of TDS in case of above employees, if PAN@ is not submitted by them to their DDOs/Offices:

Particulars	**Rupees (i)**	**Rupees (ii)**	**Rupees (iii)**	**Rupees (iv)**	**Rupees (v)**
Gross Salary Income (including allowances)	2,50,000	6,00,000	10,50,000	55,50,000	1,10,50,000
Contribution of G.P.F.	45,000	50,000	1,00,000	1,00,000	1,00,000

Computation of Total Income and tax payable thereon

Particulars	**Rupees (i)**	**Rupees (ii)**	**Rupees (iii)**	**Rupees (iv)**	**Rupees (v)**
Gross Salary	2,50,000	6,00,000	10,50,000	55,50,000	1,10,50,000
Less: Standard deduction u/s 16(ia)	50000	50000	50000	50000	50000
Less: Deduction U/s 80C	45,000	50,000	1,00,000	1,00,000	1,00,000
Taxable Income	1,55,000	5,00,000	9,00,000	54,00,000	1,09,00,000
(A) Tax Thereon	**Nil**	**Nil***	**92,500**	**14,32,500**	**30,82,500**
Surcharge				1,43,250	4,62,375
Add: Health & Education Cess @ 4%.	Nil	Nil	3700	63,030	1,41,795
Total tax payable	**Nil**	**Nil**	96,200	16,38,780	**36,86,670**

@ or Aadhaar number, as the case may be,

* After rebate of Rs 12500 u/s 87A

It may be noted that tax liability may not be the same in case the taxpayer opts for concessional tax regime under section 115BAC of the Act.

worksaccounts.com

Example 2

For Assessment Year 2021-22

Calculation of Income Tax in the case of an employee below the age of sixty years having a handicapped dependent (With valid PAN@ furnished to employer).

S.No.	Particulars	Rupees
1	Gross Salary	4,70,000
2	Amount spent on treatment of a dependant, being person with disability (but not severe disability)	7000
3	Amount paid to LIC with regard to annuity for the maintenance of a dependant, being person with disability (but not severe disability)	60,000
4	GPF Contribution	25,000
5	LIP Paid	10,000
6	Interest Income on Savings Account	12,000

Computation of Tax

S.No.	Particulars	Rupees
1	Gross Salary	4,70,000
2	Less: Standard deduction u/s 16(ia)	50,000
3	Add: Income from Other Sources Interest Income on Savings Account	Rs 12,000
4	**Gross Total Income**	4,32,000
5	**Less:** Deduction U/s 80DD (Restricted to Rs.75,000/- only)	60,000
6	**Less:** Deduction U/s 80C (i) GPF Rs.25,000/- (ii) LIP Rs.10,000/- = Rs.35,000/-	35,000
7	**Less:** Deduction u/s 80TTA on Interest Income on savings account (restricted to Rs 10000/-)	10000
8	**Total Income**	**2,97,000**
9	**Income Tax thereon/payable** (includes Rebate of Rs 12500 as per Section 87A)	**Nil**
10	**Add:** Health & Education Cess @ 4%.	**Nil**
11	**Total Income Tax payable**	**Nil**
12	**Rounded off to**	**Nil**

@ or Aadhaar number, as the case may be,

It may be noted that tax liability may not be the same in case the taxpayer opts for concessional tax regime under section 115BAC of the Act.

worksaccounts.com

Example 3

For Assessment Year 2021-22

Calculation of Income Tax in the case of an employee below age of sixty years where medical treatment expenditure was borne by the employer (With valid PAN@ furnished to employer).

S.No.	Particulars	Rupees
1	Gross Salary	5,55,000
2	Medical Reimbursement by employer on the treatment of self and dependent family member	35,000
3	Contribution of GPF	20,000
4	LIC Premium	20,000
5	Repayment of House Building Advance	25,000
6	Tuition fees for two children	60,000
7	Investment in Unit-Linked Insurance Plan	30,000
8	Interest Income on Savings Account	8,000
9	Interest Income on Time Deposit	15,000

Computation of Tax

S.No.	Particulars	Rupees
1	Gross Salary	5,55,000
2	**Add:** Perquisite in respect of reimbursement of Medical Expenses	35,000
3	Less: Standard deduction u/s 16(ia)	50,000
4	**Income from Other Sources** i) Interest Income on Savings Account Rs 8,000 ii) Interest Income on Time Deposit Rs 15,000	**23,000**
5	**Gross Total Income**	**5,63,000**
6	**a. Less:** Deduction U/s 80C (i) GPF Rs.20,000/- (ii) LIC Rs.20,000/- (iii) Repayment of House Building Advance Rs.25,000/- (iv) Tuition fees for two children Rs.60,000/- (v) Investment in Unit-Linked Insurance Plan Rs.30,000/- **Total =Rs.1,55,000/-** **Restricted to Rs.** 1,50,000/- **b. Less**: Deduction u/s 80TTA on Interest Income on savings account (restricted to Rs 10,000/- - available only on Savings account interest) Rs 8000 Total deduction available Rs 1,58,000/-	**1,58,000**
7	**Total Income**	**4,05,000**
8	**Income Tax thereon/payable** (includes Rebate of Rs 12500 as per Section 87A)	**Nil***
9	**Add:** Health & Education Cess @ 4%.	**Nil**
10	**Total Income Tax payable**	**Nil**

@ or Aadhaar number, as the case may be.

It may be noted that tax liability may not be the same in case the taxpayer opts for concessional tax regime under section 115BAC of the Act.

worksaccounts.com

Example 4

For Assessment Year 2021-22

Illustrative calculation of House Rent Allowance U/s 10 (13A) in respect of residential accommodation situated in Delhi in case of an employee below the age of sixty years (With valid PAN@ furnished to employer).

S.No.	Particulars	Rupees
1	Salary	4,00,000
2	Dearness Allowance	2,00,000
3	House Rent Allowance	1,40,000
4	House rent paid	1,44,000
5	General Provident Fund	36,000
6	Life Insurance Premium	4,000
7	Subscription to Unit-Linked Insurance Plan	50,000

Computation of total income and tax payable thereon

S.No.	Particulars	Rupees
1	Salary + Dearness Allowance + House Rent Allowance 3,50,000+2,00,000+1,40,000 = 6,90,000	7,40,000
2	**Total Salary Income**	**7,40,000**
3	Less: Standard deduction u/s 16(ia)	50,000
4	**Less:** House Rent allowance exempt U/s 10(13A): **Least of:** (a). Actual amount of HRA received= 1,40,000 (b). Expenditure of rent in excess of 10% of salary (including D.A. presuming that D.A. is taken for retirement benefit) (1,44,000-55,000) = **89,000** (c). 50% of Salary(Basic+ DA) = 2,75,000 [Bombay/Kolkata/Delhi/Chennai] or 40% of salary (Basic + DA) in case of other cities	89,000
	Gross Total Income	**6,01,000**
	Less: Deduction U/s 80C (i) GPF Rs.36,000/- (ii) LIC Rs. 4,000 (iii) Investment in Unit-Linked Insurance Plan Rs.50,000/- **Total =Rs.90,000/-**	90,000
5	**Total Income**	**5,11,000**
	Tax payable	**14700**
	Add: Health & Education Cess @ 4%.	**588**
	Total Income Tax payable	**15288**
	Rounded off to	**15290**

@ or Aadhaar number, as the case may be.

It may be noted that tax liability may not be the same in case the taxpayer opts for concessional tax regime under section 115BAC of the Act.

worksaccounts.com

Example 5

For Assessment Year 2021-22

Illustrating valuation of perquisite and calculation of tax in the case of an employee below age of sixty years of a private company in Mumbai who was provided accommodation in a flat at concessional rate for ten months and in a hotel for two months (With valid PAN @furnished to employer).

S.No.	Particulars	Rupees
1	Salary	7,50,000
2	Bonus	1,40,000
3	Free gas, electricity, water etc. (Actual bills paid by company)	40,000
4(a)	Flat at concessional rate (for ten month). @ Rs.36000/month	3,60, 000
4(b)	Hotel rent paid by employer (for two month)	1,00,000
4(c)	Rent recovered from employee.	60,000
4(d)	Cost of furniture.	2,00,000
5	Subscription to Unit Linked Insurance Plan	50,000
6	Life Insurance Premium	10,000
7	Contribution to recognized P.F.	42,000

COMPUTATION OF TOTAL INCOME AND TAX PAID THEREON:

S.No.	Particulars	Rupees
1	Salary	7,50,000
2	Bonus	1,40,000
3	Total Salary(1+2) for Valuation of Perquisites	8,90,000
	Valuation of perquisites	
4(a)	Perquisite for flat(Cities having population>25 lakh as per 2000 census) Lower of (15% of salary for 10 months=Rs.1,05,000/-) and (actual rent paid= Rs 3,60,000) i.e. Rs. 1,05,000	
4(b)	Perquisite for hotel : Lower of (24% of salary of 2 months=Rs 33,600) and (actual payment= Rs 1,00,000) i.e. Rs 33,600	
4(c)	Perquisites for furniture @ 10% of cost (10% of Rs. 2,00,000) Rs. 20,000	
4(c)(i)	**Total of [4(a)+(b)+(c)]** (1,05,000+ 33,600+ 20,000)Rs.158,600 **Less: rent recovered** (-)Rs. 60,000 = **Rs. 98,600**	1,38,600
4(d)	Add Perquisite for free gas, electricity, water etc. Rs.40,000 (+) Rs 98,600 [4(c)(i)] = Rs**1,38,600** Total perquisites	
5	Gross Total Income (Rs.8,40,000+ 1,38,600)	10,28,600
6	Less: Standard deduction u/s 16(ia)	50,000
7	**Gross Total Income**	**9,78,600**

worksaccounts.com

8	**Less: Deduction U/s 80C:** (i). Provident Fu (80C)	
	:42,000 (ii). LIC (80C) :10,000 (iii). Subscription to Unit Linked Insurance Plan(80C) :50,000/- Total = **1,02,000** **Restricted to Rs 1,02,000 u/s 80C**	**1,02,000**
9	**Total Income**	**8,76,600**
10	Tax Payable	**87,820**
11	**Add:** Health & Education Cess @ 4%.	**3513**
12	**Total Income Tax payable**	**91,333**
13	**Rounded off to**	**91,330**

@ or Aadhaar number, as the case may be.

It may be noted that tax liability may not be the same in case the taxpayer opts for concessional tax regime under section 115BAC of the Act.

worksaccounts.com

Example 6

For Assessment Year 2021-22

Illustrating Valuation of perquisite and calculation of tax in the case of an employee below the age of 60 years of a Private Company posted at Delhi and repaying House Building Loan (With valid PAN @furnished to employer).

S.No.	Particulars	Rupees
1	Salary	4,50,000
2	Dearness Allowance	1,00,000
3	House Rent Allowance	1,80,000
4	Special Duties Allowance	12,000
5	Provident Fund	60,000
6	LIP	10,000
7	Deposit in NSC VIII issue	30,000
8	Rent Paid for house hired by employee	1,20,000
9	Repayment of House Building Loan (Principal)	60,000
10	Tuition Fees for three children (Rs.10,000 per child)	30,000

Computation of total income and tax payable thereon

S.No.	Particulars	Rupees
1	Gross Salary (Basic+DA+HRA+SDA)	7,42,000
	Less: House rent allowance exempt U/s 10 (13A) Least of: (a). Actual amount of HRA received. :Rs.1,80,000 **(b).** Expenditure on rent in excess of 10% of salary (Including D.A.)assuming D.A. is included for retirement benefits (1,20,000- 50,000) :Rs. **70,000** (c). 50% of salary (including D.A) : Rs. 2,50,000	70,000
2	Less: Standard deduction u/s 16(ia)	50,000
3	**Gross Total Taxable Income**	**6,22,000**
4	**Less:** Deduction U/s 80C (i). Provident Fund : 60,000 (ii). LIP : 10,000 (iii). NSC VIII Issue : 30,000 (iv). Repayment of HBA : 60,000 (v). Tuition Fees (Restricted to two children) : 20,000 Total : 1,80,000 **Restricted to 1,50,000**	1,50,000
5	**Total Income**	**4,72,000**
6	**Income Tax thereon/payable** (includes Rebate of Rs 12500 as per Section 87A)	**Nil**
7	**Add:** Health & Education Cess @ 4%.	**Nil**
8	**Total Income Tax payable**	**Nil**
9	**Rounded off to**	**Nil**

@ or Aadhaar number, as the case may be

It may be noted that tax liability may not be the same in case the taxpayer opts for concessional tax regime under section 115BAC of the Act.

worksaccounts.com

Example 7

For Assessment Year 2021-22

A. Calculation of Income tax in the case of a retired employee above the age of sixty years but below the age of 80 years and having gross pension of:

iv) Rs.5,00,000/-
v) Rs.8,50,000/-,
vi) Rs. 13,00,000/-.

B What will be the amount of TDS in case of above employees, if PAN@ is not submitted by them to their DDOs/Offices:

Particulars	Rupees (i)	Rupees (ii)	Rupees (iii)
Gross Pension	5,00,000	8,50,000	13,00,000
Contribution of P.P.F.	70,000	1,00,000	1,50,000

Computation of Total Income and tax payable thereon

Particulars	Rupees (i)	Rupees (ii)	Rupees (iii)
Gross Pension	5,00,000	8,50,000	13,00,000
Less: Standard deduction u/s 16(ia)	50,000	50,000	50,000
Less: Deduction U/s 80C	70,000	1,00,000	1,50,000
Taxable Income	3,80,000	7,00,000	11,00,000
Tax thereon (includes Rebate of Rs 12500 as per Section 87A	Nil	50,000	1,40,000
Add: Health & Education Cess @ 4%.	Nil	2,000	5,600
Total tax payable	**Nil**	**52,000**	**1,45,600**

@ or Aadhaar number, as the case may be.
# It may be noted that tax liability may not be the same in case the taxpayer opts for concessional tax regime under section 115BAC of the Act.

worksaccounts.com

Example 8

For Assessment Year 2021-22

A. Calculation of Income tax in the case of a retired employee above the age of 80 years and having gross pension of:

i) Rs.5,50,000/-,
ii) Rs.8,50,000/- ,
iii) Rs. 13,00,000/-.

B What will be the amount of TDS in case of above employees, if PAN @is not submitted by them to their DDOs/Offices:

Particulars	Rupees (i)	Rupees (ii)	Rupees (iii)
Gross Pension	5,50,000	8,50,000	13,00,000
Contribution of P.P.F.	80,000	1,20,000	1,50,000

Computation of Total Income and tax payable thereon

Particulars	Rupees (i)	Rupees (ii)	Rupees (iii)
Gross Pension	5,50,000	8,50,000	13,00,000
Less: Standard deduction u/s 16(ia)	50,000	50,000	50,000
Less: Deduction U/s 80C	80,000	1,20,000	1,50,000
Taxable Income	4,20,000	6,80,000	11,00,000
Tax thereon	**Nil**	**36,000**	**1,30,000**
Add: Health & Education Cess @ 4%.	Nil	1,440	5,200
Total tax payable	**Nil**	**37,440**	**1,35,200**

@ or Aadhaar number, as the case may be.
# It may be noted that tax liability may not be the same in case the taxpayer opts for concessional tax regime under section 115BAC of the Act.

worksaccounts.com

Example 9

Exemption u/s 10 (13A)

1. **Mr. A, employed with XYZ Ltd. Up to 31.10.2019, received following emoluments :**

S.No.	Particulars	Rupees
1.	Basic pay p.m.	13,000
2.	Bonus for the year received in July, 2019	7,200
3.	Club facility (for private use only) Expenditure by employer p.m.	700
4.	House Rent Allowance p.m.	2,800
5.	Employer's contribution to URPF p.m. (Mr. A also made equal contribution)	1,000
	W.e.f. 01.11.2019, Mr. A joined PQR Ltd., with following pay package :	
1.	Basic pay p.m.	18,000
2.	House Rent Allowance p.m.	1,600
3.	Club Facility (for private use only) Expenditure by employer p.m.	1,100
4.	Use of car for journey between office and residence – Employer's expenditure p.m.	600
5.	Employer's contribution to RPF p.m. (Mr. A also made equal contribution)	2,000
	Other particulars of Mr. A are as under :	
1.	Mr. A resides at Amritsar paying a monthly rent of	3,500
2.	Mr. A's income from other sources	1,35,000
3.	Mr. A contributed to LIC/PPR/NSC etc.	20,000
	Compute Mr. A's taxable income and tax liability for A.Y. 2020-21.	

Computation of Tax

S.No.	Particulars		Rupees
1.	Income from Salary		
	(a) From XYZ Ltd.		
	Basic pay (Rs.13,000 x 7)		91,000
	Bonus		7,200
	Club facility (Rs.700 x 7)	**Rupees**	4,900
	H.R.A. (Rs.2,800 x 7)	19,600	
	Less : **Exempt u/s 10(13A)**	15,400	4,200
	Employer's Contribution to U.R.P.F.		1,07,300
	(b) From PQR Ltd.	**Rupees**	
	Basic pay (Rs.18,000 x 5)	90,000	
	H.R.A. (Rs.1,600 x 5)	8,000	
	Less : **Exempt u/s 10(13A)**	8,000	
	Club Facility (Rs.1,100 x 5)	5,500	
	Facility of Car (not taxable as perquisite)	15,400	
	Employer's Contribution to R.P.F.		95,500
	Gross Salary		2,02,800
	Less: Standard deduction u/s 16(ia)		40,000
	Net Salary		1,62,800
2.	**Income from Others Sources**		**1,35,000**

worksaccounts.com

	Gross Total Income		2,97,800
	Less : Deduction u/s 80C		
	: Contribution to LIC/PPF/NSC	Rs. 20,000	
	: Contribution to RPF (Rs.2000 x 5)	Rs. 10,000	**30,000**
		Total Income	**2,67,800**
	Computation of Tax Liability		
	Tax payable on Rs.2,67,800		8,90
	Less : Rebate u/s 87A		8,90
	Net Income-tax payable		Nil
	Add : Health & Education Cess @ 4%.		Nil
	Total Tax Payable		Nil

It may be noted that tax liability may not be the same in case the taxpayer opts for concessional tax regime under section 115BAC of the Act.

worksaccounts.com

Example 10

1. Computation of Taxable Salary and allowances, Deduction for Interest on Housing Loan and Deduction u/s 80C.

Mr. X, a Central Govt. Officers in Delhi, is receiving Basic Pay Rs.40,000, DA at prescribed rates, transport allowances @ Rs.3600+DA thereon, and HRA (existing- from 1st July 2019 @24% of basic pay (though living in his own house). His date of increment is Ist July. The following are other particulars of his income. Compute his taxable income and tax payable, for A.Y.2020-21

S.No.	Particulars	Rupees
1.	Honorarium for valuation of answer books of a departmental Examination	3,000
2.	Fee for work done for a private body (1/3rd of fees has been retained by Govt.)	6,000
3.	Contributions to G.P.F. p.m.	4,700
4.	Postal Life Insurance Premium financed from G.P.F. p.m.	280
5.	Contribution to Central Govt. Employees Group Insurance Scheme p.m.	500
6.	Life Insurance Premium (being a Life Insurance Policy of Rs.1,00,000 taken in name of his wife before 1.04.2012)	10,500
7.	Contribution to Public Provident Fund	10,000
8.	Repayment of HDFC loan borrowed after 1.04.1999 EMI Rs.25,000 (Towards loan Rs.95,000, towards interest Rs.2,05,000)	3,00,000

Computation of Tax

S.No.	Particulars		Rupees
1.	**Income from Salary**		
	Basic Pay @ Rs 40,000 p.m		
	(March to June '19)	1,60,000	
	@ Rs 41,200 p.m * (July 2019 to Feb 2020)	3,29,600	4,89,600
	Dearness Allowance		
	1.3.2019 to 30.06.2019 @ 7% i.e., Rs 40,000 p.m	11,200	
	1.7.2019 to 31.12.2019 @ 9% i.e. Rs 41,200 p.m	22,248	
	1.1.2020 to 28.02.2020 @ 11% (assumed) i.e.,Rs. 41,200 p.m	9,064	5,32,112
	House Rent Allowance	1,17,504	6,49,616
	Transport Allowance		
	1.3.2019 to 30.6.2019 @ Rs 3200 p.m	12,800	
	1.7.2019 to 31.12.2019 @ Rs 3780 p.m	22,680	
	1.1.2020 to 28.2.2020 @ Rs 3852 p.m	7704	
		43,184	
			43,184
			6,92,800
	Honorarium		3,000
	Fees (2/3 retained by him)		34,800
	Total Salary		7,30,600

worksaccounts.com

	Less: Standard Deduction u/s section 16(ia)		50,000
	Net Salary		6,80,600
2.	**Income from House Property**		
	Self-occupied u/s 23(2)(a) where property is acquired/constructed with borrowed capital on or after 1.4.1999 and such acquisition/construction computed within five years from the end of FY in which capital was borrowed.		Nil
	Less: Interest on HDFC Loan (upto Rs. 2,00,000)	2,00,000 (-)	2,00,000
	Gross Total Income		4,80,600
	Less: Deduction u/s 80 C		
	- GPF @ Rs 4,700/-p.m	56,400	
	- CGEGIS @ Rs 500/- p.m	6,000	
	- Life Insurance Premium	10, 500	
	- Repayment of HDFC Loan	95,000	
	- Deposit in Public Provident Fund	10,000	
		1,77,900	
			1,50,000
	Restricted to a maximum of Taxable Income		3,30,600
	Computation of Tax Liability		
	Tax payable		4,030
	Less : Rebate u/s 87A		4,030
	Net Income-tax payable		Nil
	Add : Health & Education Cess @ 4%.		Nil
	Total Tax Payable		Nil

It may be noted that tax liability may not be the same in case the taxpayer opts for concessional tax regime under section 115BAC of the Act.

worksaccounts.com

ANNEXURE-II

FORM NO.12BA
{See rule 26A(2)(b)}

Statement showing particulars of perquisites, other fringe benefits or amenities and profits in lieu of salary with value thereof

1) Name and address of employer :

2) TAN

3) TDS Assessment Range of the employer :

4) Name, designation and PAN or Aadhaar number of employee :

5) Is the employee a director or a person with :
substantial interest in the company
(where the employer is a company)

6) Income under the head "Salaries" of the employee :
(other than from perquisites)

7) Financial Year :

8) Valuation of Perquisites

S.No	Nature of perquisite (see rule 3)	Value of perquisite as per rules (Rs.)	Amount, if any recovered from the employee (Rs.)	Amount of perquisite chargeable to tax Col(3) - Col(4) (Rs.)
(1)	(2)	(3)	(4)	(5)
1	Accommodation			
2	Cars/Other automotive			
3	Sweeper, gardener, watchman or personal attendant			
4	Gas, electricity, water			
5	Interest free or concessional loans			
6	Holiday expenses			
7	Free or concessional travel			
8	Free meals			
9	Free Education			
10	Gifts, vouchers etc.			
11	Credit card expenses			
12	Club expenses			
13	Use of movable assets by employees			

worksaccounts.com

14	Transfer of assets to employees			
15	Value of any other benefit/amenity/service/privilege			
16	Stock options (non-qualified options)			
17	Other benefits or amenities			
18	Total value of perquisites			
19	Total value of Profits in lieu of salary as per 17(3)			

9. Details of tax, -
   (a) Tax deducted from salary of the employee u/s 192(1) .....
   (b) Tax paid by employer on behalf of the employee u/s 192(1A) .....
   (c) Total tax paid .....
   (d) Date of payment into Government treasury .....

DECLARATION BY EMPLOYER

I ..... s/o ..... working as .....(designation) do hereby declare on behalf of ..... (name of the employer) that the information given above is based on the books of account, documents and other relevant records or information available with us and the details of value of each such perquisite are in accordance with section 17 and rules framed thereunder and that such information is true and correct.

Place...

Date...

Signature of the person responsible for deduction of tax

Full Name .....

Designation.....

worksaccounts.com

Annexure IIA

FORM NO.12BB

(See rule 26C)

Statement showing particulars of claims by an employee for deduction of tax under section 192

1. Name and address of the employee:			
2. Permanent Account Number or Aadhaar number of the employee:			
3. Financial year:			
Details of claims and evidence thereof			
Sl No.	Nature of claim	Amount (Rs.)	Evidence / particulars
(1)	(2)	(3)	(4)
1	House Rent Allowance:		
	(i) Rent paid to the landlord		
	(ii) Name of the landlord		
	(iii) Address of the landlord		
	(iv) Permanent Account Number or Aadhaar number, as the case may be,of the landlord		
	Note: Permanent Account Number or Aadhaar number, shall be furnished if the aggregate rent paid during the previous year exceeds one lakh rupees		
2	Leave travel concessions or assistance		
3	Deduction of interest on borrowing:		
	(i) Interest payable/paid to the lender		
	(ii) Name of the lender		
	(iii) Address of the lender		
	(iv) Permanent Account Number or Aadhaar number of the lender		
	(a) Financial Institutions(if available)		
	(b) Employer(if available)		
	(c) Others		
4	Deduction under Chapter VI-A		
	(A) Section 80C,80CCC and 80CCD		
	(i) Section 80C		
	(a)		
	(b)		
	(c)		
	(d)		

worksaccounts.com

		.....		
	(e)	.....		
	(f)	.....		
	(g)	.....		
	(ii) Section 80CCC			
	(iii) Section 80CCD			
	(B) Other sections (e.g. 80E, 80G, 80TTA, etc.) under Chapter VI-A.			
	(i) section.....			
	(ii) section.....			
	(iii) section.....			
	(iv) section.....			
	(v) section.....			

Verification	
I,.....,son/daughter of..... do hereby certify that the information given above is complete and correct.	
Place.....	
Date.....	(Signature of the employee)
Designation	Full Name

worksaccounts.com

ANNEXURE III

POINT NO.4.4.2.1 OF CIRCULAR OF DEDUCTION OF TAX AT SOURCE – INCOME TAX DEDUCTION FROM SALARIES U/S 192 OF THE INCOME-TAX ACT, 1961 – FINANCIAL YEAR 2015-16

Compulsory filing of Statement by PAO, Treasury Officer, etc. in case of payment of TDS by Book Entry.

1. Procedure of preparation and furnishing Form 24G at TIN-Facilitation Centres (TIN-FCs):

The Form 24G should be prepared by the PAO/DTO/CDDO (hereinafter referred to as AOs) as per the data structure (File format) prescribed by the DIT (Systems), Delhi which is available on TIN website www.tin-nsdl.com. The AOs can prepare Form 24G either by using in-house facilities, third party software or by using form 24G Return Preparation Utility (RPU) developed by NSDL e-Governance Infrastructure Limited (NSDL), which is freely downloadable from the TIN web-site www.tin-nsdl.com.

After preparation of form 24G, the AO is required to validate the same by using the Form 24G File Validation Utility (FVU) which is freely available on TIN website.

Once file is validated through FVU, _.fvu file' in CD/DVD/Pen Drive along with physical Statement Statistic Report (SSR) signed by the AO, to be furnished at TIN-FCs. On successful acceptance of Form 24G at the TIN-FC, an acknowledgement containing 15 digit Token no. is provided to the AO. The AO can view the status of Form 24G on TIN website.

Book identification Number (BIN) is generated for each _DDO record with valid TAN' reported in Form 24G, which is further disseminated to the AOs on email ID mentioned in Form 24G. AOs need to communicate the BIN details to respective DDOs. BIN is to be quoted by the DDOs in quarterly e-TDS/TCS statements. BIN consists of receipt number of Form 24G. DDO serial number and date of transfer voucher.

The AO is required to furnish Form 24G within ten days from the end of the month in respect of tax deducted by the deductors and reported to him for that month. Only one regular Form 24G for a _month-FY' can be submitted.

1.1 Correction in Form 24G:

AO can file a correction Form 24G for any modification or cancellation of Form 24G accepted at TIN central system. Preparation and validation of correction Form 24G is in line with regular form 24G. The validated Form 24G correction file (.fvu file) copied on a CD/pen drive is to be submitted along with the provisional receipt of original Form 24G and SSR to TIN-FC. On successful acceptance of correction Form 24G at the TIN-FC, an acknowledgement containing 15 digit Token no. is provided to the AO. The AO can view the status of Form 24G on TIN website.

2. Online upload of Form 24G at TIN websites:

For online upload of Form 24G at TIN website, the Accounts Office Identification Number (AIN) is a pre-requisite. For online AIN registration, AO need to file at least one Form 24G through TIN-FC. After AIN registration, AO can file Form 24G through AO Account at TIN website. Preparation and validation of correction Form 24G is in line with regular Form 24G (submitted at TIN-FC). The validated Form 24G correction file (.fvu file) is to be uploaded at TIN website. There is no need to submit SSR in online upload. For Form 24G accepted at TIN Central System an online acknowledgement containing a 15 digit token number is generated and displayed to the AO. The format of the acknowledgement is identical to the one issued by the TIN-FC.

No charges are applicable to AOs for online upload of Form 24G.

On login, AO can also View/Download BIN details and update demographic details.

worksaccounts.com

No Digital Signature Certificate (DSC) is required for registration and online uploading of Form 24G.

2.1 Online uploading of correction Form 24G at TIN website:

AO can file a correction Form 24G for any modification or cancellation of Form 24G accepted at TIN Central System. Preparation and validation of correction form 24G is in line with regular form 24G. The validated Form 24G correction file (.fvu file) can be uploaded online through AO account at TIN website. For correction Form 24G accepted at TIN central system, an online acknowledgement containing a 15 digit token number is generated and displayed to the AO. The format of the acknowledgement is identical to the one issued by the TIN-FC. There is no need to submit SSR and provisional receipt of original form 24G in online upload.

3. For FAQs and further details, AOs are advised to log on TIN website www.tin-nsdl.com

******

worksaccounts.com

ANNEXURE IV

Furnishing of Monthly Form No. 24G Statements by Pay and Accounts Officers (PAOs)/District Treasury Officers (DTOs)/Cheque Drawing and Disbursing Officers(CDDOs)

1. Under what income tax rule should Form 24G be filed?

Income-tax Department Notification no. 41/2010 dated May 31, 2010amended the Income Tax Rule 30 which mandates that in case of an office of the Government, where tax has been paid to the credit of Central Government without the production of a challan (associated with deposit of the tax in a bank), **the relevant PAO / CDDO / DTO or an equivalent office of the government (herein after called as AO in this document) is required to file Form 24G on monthly basis**.

2. Who is the relevant PAO/CDDO/DTO who is liable for filing Form 24G?

A relevant PAO/CDDO/DTO is that office to whom the Deductor/DDO (TAN holder) reports remittance of TDS/TCS through book adjustment. Generally, the Central Government DDOs report TDS through book entry to their respective Pay and Accounts Officers (PAOs) and the State Government DDOs report TDS through book entry to their respective District Treasury Officers(DTOs). Such PAOs and DTOs are required to file Form 24G on monthly basis.

There are also cases of Cheque Drawing and Disbursing Officers (CDDOs) who report TDS through book entry directly to State AG. For example, PWD, Forest Department etc. Such CDDOs are also required to file Form 24G on monthly basis. Schematic Diagram at Annexure-III clarifies the person responsible for filing Form 24G in different scenarios.

3. Can the same office/officer also act as DDO and AO?

Ordinarily, the PAO office is the one to whom the DDO reports the TDS and therefore, both should be from different offices. However, where the DDO and AO are the same, as in the case of CDDOs, the statistics report of Form 24G should be counter signed by his superior officer.

4. What is AIN and who should apply?

Accounts Office Identification Number (AIN) is a unique seven digit which is allotted by the Directorate of Income Tax (Systems), Delhi, to every AO. Each AO is uniquely identified in the system by this number. AOs are required to apply for AIN with jurisdictional TDS office. The AIN application can be downloaded from TIN site. Every AIN holder is required to file Form 24G.

Each DDO is identified in the system by a Tax Deduction and Collection Account Number (TAN). This number is allotted by Income Tax Department.

5. Where should the Accounts Office Identification Number (AIN) application be submitted ?

The duly filled and signed application for AIN allotment is to be submitted in physical form by the PAO / CDDO / DTO to the jurisdictional CIT (TDS). Complete and correct AIN application forms will be forwarded by the jurisdictional CIT (TDS) to NSDL e-Governance Infrastructure Limited (NSDL), Times Tower, 1st Floor, Kamala Mills Compound, SenapatiBapatMarg, Lower Parel, Mumbai - 400013 recommending allotment of AIN to the PAO / CDDO / DTO.

worksaccounts.com

6. What information should be submitted through Form 24G?

Every AO should furnish one complete, correct and consolidated Form 24G every month having details of each type of deduction / collection separately viz. TDS-Salary / TDS-Non Salary / TDS-Non Salary Non Residents / TCS made by each DDO under his jurisdiction.

7. Where should Form 24G be submitted?

Form 24G is to be furnished only in electronic form in a CD/pen drive at TIN-FCs or online through AO Account at www.tin-nsdl.com web portal. The facility to submit Form No. 24G online is available free of cost. Provisional Receipt Number (PRN) is issued as an acknowledgement of the receipt of Form 24G.

8. How to register for online facility?

Registration for AO Account is mandatory for filing Form No. 24G online through TIN website, www.tin-nsdl.com. Registration AO Account is required once only. AO required to submit the Form No. 24G at TIN-FC at least once to comply with the Know Your Customer (KYC) norms for registration of the AO Account. After registration, it is optional for AO either to submit the Form No.24G in CD/Pen drive at TIN-FC or online.

9. What are the functionalities available with AO Account?

Through the AO Account, the AO can view the status of Form No. 24G filed, obtain BIN (Book Identification Number) details, update AO profile and upload Form No. 24G. The status tracking is based on AIN and concerned Provisional Receipt Number (PRN) of Form 24G.

10. Can the AO furnish Form No. 24G in paper form?

No. Form 24G is to be filed only in electronic form.

11. Can the AO submit the electronically prepared Form No.24G at the Income Tax Office?

No. Electronically prepared Form No.24G can only be submitted at TIN-FC or online .

12. What does Form 24G contain?

Every Form 24G should be prepared in accordance with the data structure prescribed by the Income Tax Department (ITD). Form 24G contains-

- Details of the AO filing Form 24G (AIN, name, demographic information, contact details).
- Category of AO (Central / State Government) along with details of ministry / state.
- Statement details (month and year for which Form 24G is being filed).
- Payment summary; nature of deduction wise (TDS – Salary /TDS Non-salary / TDS – Non-salary Non-resident / TCS).
- DDO wise payment details (TAN of DDO, name, demographic details, total tax deducted and remitted to the Government account (A.G. / Pr.CCA).
- DDOs which are associated with the AO. If the AO wants to add/delete or update details of DDO, same should be mentioned in the statement.

13. What is the procedure to prepare the Form 24G statement?

worksaccounts.com

The AOs can prepare Form 24G either by using in-house facilities, third party software or by using Form 24G Preparation Utility developed by NSDL, which is freely downloadable from the TIN web-site **(www.tin-nsdl.com)** or ITD website (**www.incometaxindia.gov.in**).

Once the statement is prepared, the AO shall validate the same by using File Validation Utility (FVU) developed by NSDL and freely available at the TIN or ITD website. The statement can be furnished in Compact Disk (CD) at any of the TIN-Facilitation Centres (TIN-FC) managed by NSDL along with Form 24G Statement Statistics Report (generated through File Validation Utility), duly signed by the AO. The list of TIN-FCs is available at TIN or ITD website.

Once Form 24G is accepted by the TIN-FC, it will issue a provisional receipt with a unique Provisional Receipt Number (PRN) to the AO as a proof of submission of the statement.

14. What is Form 24G Preparation Utility?

The Form 24G Preparation Utility is a Java based utility. Form 24G Preparation Utility can be freely downloaded from www.tin-nsdl.com. After downloading, it needs to be saved on the local disk of the machine.

JRE (Java Run-time Environment) [versions: SUN JRE: 1.4.2_02 or 1.4.2_03 or 1.4.2_04 or IBM JRE: 1.4.1.0] should be installed on the computer where Form 24G Preparation Utility is being installed. JRE is freely downloadable from http://java.sun.com and http://www.ibm.com/developerworks/java/jdk or you can ask your computer vendor (hardware) to install the same for you.

Form 24G Preparation Utility can be executed on Windows platform(s) Win 2K Prof. / Win 2K Server/ Win NT 4.0 Server/ Win XP Prof. To run the _Form 24G Preparation Utility', click on the _24GRPU.bat' file.

If JRE is not installed on the computer, then on clicking _24GRPU.bat', a message will be displayed. In such cases, install JRE and try again. If appropriate version of JRE is installed, then the _Form 24G Preparation Utility' will be displayed.

15. What are the steps to download and install Form 24G Preparation Utility?

For assistance in downloading and using Form 24G Preparation Utility, please read the instructions provided in **„Help"** in the Form 24G Preparation Utility. This utility can be used for preparation of Form 24G with upto 75,000 records. Form 24G Preparation Utility (version 1.2) should be used for regular and correction statements.

16. What is File Validation Utility (FVU)?

The AO should pass the Form 24G (Regular/Correction) file generated using Preparation Utility through the File Validation Utility (FVU) to ensure format level accuracy of the file. This utility is also freely downloadable from TIN website. In case the Form 24G contains any errors, the AO should rectify the same. After rectifying the errors, user should pass the rectified Form 24G through the FVU. This process should be continued till an error-free Form 24G is generated. Form 24G (regular/correction) prepared from F.Y. 2005-06 onwards can be validated using this utility.

The Form 24G FVU is a Java based utility. JRE (Java Run-time Environment) [versions: SUN JRE: 1.4.2_02 or 1.4.2_03 or 1.4.2_04 or IBM JRE: 1.4.1.0] should be installed on the computer where the Form 24G FVU is being installed. JRE is freely downloadable from http://java.sun.com and http://www.ibm.com/developerworks/java/jdk or you can request your computer vendor (hardware) to install the same for you.

worksaccounts.com

The Form 24G FVU setup comprises of two files, namely-

- **Form 24G FVU.bat:** This is a setup program for installation of FVU.
- **Form 24G_FVU_STANDALONE.jar:** This is the FVU program file.

These files are in an executable zip file (Form24GFVU.exe) (version 1.2). These files are required for installing the Form 24G FVU.

Instructions for extracting and setup are given in:

- Form 24G FVU Extract and Setup

17. After preparation of Form No. 24G statement through RPU, three files are generated when such statement passes through FVU. Is the AO required to take all three files in CD /Pen drive to TIN-FC?

When a valid file is passed through the FVU, the following three files are generated:-

(a) The upload file
(b) Form 24G statement Statistics Report and
(c) Form 24G.

Every Form 24G (upload file) mentioned at Sr. No. (a) is to be saved in CD and the same should be accompanied with the Statement Statistic Report mentioned at Sr. No. (b), **in paper form duly signed by the Accounts Officer**, which needs to be submitted at TIN-FCs.

Form 24G: Form 24G, at serial number (c) above, is a reader friendly format of TDS/TCS Book Adjustment form. This is like the physical form of Form 24G in html format. It contains all the details of Accounts Officer as well as Drawing and Disbursement Officer. There is no need to submit this file.

18. Can the Form 24G Statement be corrected?

Every Form 24G is to be prepared in accordance with the data structure prescribed by the Income Tax Department (ITD). If it does not confirm to the new data structure it will be rejected by TIN.

As per procedure, statements relating to Form 24G should be complete and correct. No fragmented statements are expected to be filed (i.e. separate statements giving details for deductions under different form type with respect to the same AIN, FY and month). However, any mistake made in an original accepted statement can be rectified by submitting a _correction statement'. **For correction, the latest version of the RPU should be downloaded from TIN website.**

Form 24G corrections can also be uploaded directly at the TIN website. For direct upload at TIN Central system, AO has to first register AIN at TIN website and upload the Form 24G correction.

19. What are the different kinds of correction statements allowed?

There are two different types of correction statements that can be furnished by the AO. These are listed below.

- **M (Modify) -:** For any modification in the existing Form 24G statement.
- **X (Cancel) -:** For cancellation of an existing Form 24G statement.

For preparation of correction statement, the receipt number of the original statement and receipt number of the previous statement is mandatory.

worksaccounts.com

In case of first correction, PRN of original statement should be provided in field **–Receipt number of Original Statement–** and also in the field **–Receipt number of Previous Statement –**.

In case a correction statement has already been filed earlier, PRN of original statement should be provided in field **"Receipt number of Original Statement"** and PRN of last correction to be mentioned in field **"Receipt number of Previous Statement".**

20. What is M –Type of Correction Statement?

This type of correction statement is to be furnished by AO, if it wishes to update any of its details like its name, address, Responsible person details, category, Ministry, State or deletion and addition of DDO (Drawing & Disbursing Officer) etc. **Modifications in AIN (Account office Identification Number), Financial Year and Month are not allowed.**

There are three modes by which changes can be made in the DDO details provided in original Form 24G statement:

- **Add**: DDO records can be added to the original Form 24G statement
- **Update**: details of DDO (i.e. TAN, TAN Name, demographic and contact details, amount of tax deducted and remitted, nature of deduction) can be updated for the DDO records provided in original or subsequent correction statement
- **Delete**: DDO records provided in original Form 24G or subsequent correction statement can be deleted

M-type correction statement will always contain AO details and details of DDO which are added and/or deleted.

21. What is X–Type of Correction Statement?

This type of correction statement is to be furnished by AO if it wishes to cancel an existing Form 24G statement. Filing of Correction type X will allow AOs to file regular Form 24G for the same primary key (AIN, Financial year and Month). This type of correction is to be filed only if the Form 24G has been filed with wrong AIN, F.Y. or Month.

22. What is BIN?

BIN stands for **–Book Identification Number–** for each form type mentioned in the accepted monthly form No. 24G. BIN consists of the following:

(i) **Receipt Number:** Receipt number is a seven digit unique number generated on successful acceptance of Form 24G.

(ii)**DDO Serial Number:** It is a five digit unique number generated for every DDO transaction reported in Form 24G statement.

(iii) **Transfer Voucher Date:** It is the last date of month for which Form 24G statement is filed.

BIN is required to be disseminated to the respective DDOs who in turn are required to report the same in the TDS/TCS Statement. The quoting of BIN has been made mandatory w.e.f 01st February, 2012. BIN is a unique number to verify the claim of TDS deposited without production of challan. As it is a verification key, it is advised that valid BIN disseminated by AO to the respective DDO should be correctly filled in TDS statement.

23. When is BIN generated?

worksaccounts.com

On processing of accepted Form 24G statement, BIN is generated for each DDO record (with valid TAN) present in Form 24G statement. BIN are generated at TIN Central System and intimated to the PAOs with details of TAN and Form Type.

24. What do the PAO and DDO have to do with the BIN?

PAOs have to disseminate the BINS to respective DDOs. While preparing the quarterly TDS/TCS statement, DDO has to quote the said BIN details, if tax has been paid through transfer voucher (book adjustment).

BINs generated for a particular 24G are mailed to the AO on the e-mail id provided in Form 24G. In addition, AO may also download the BIN details through AO login at TIN site.

25. Under what circumstances will BIN be generated?

- BIN will be generated for valid TAN-DDO records added in Form 24G correction statement.
- BIN will be generated for DDO records where invalid TANs/TAN not present in Income Tax Department database is updated with a valid TAN.
- New BIN will not be generated for any update made in TAN name, demographic and contact details, amount of Tax deducted and remitted or nature of deduction.
- BIN details will not be generated for deleted DDO records.

26. What is the utility of BIN?

The BIN details and amount of TDS reported in the quarterly TDS/TCS Statement filed by the DDO will be matched with the respective details filed in Form No.24G filed by the PAO for verification purpose.

27. Are there instances where BIN details and amount of TDS reported in TDS/TCS statements do not match with that reported in Form 24G? What are the consequences of such mismatch?

(i) Instances of wrong/incorrect reporting of BIN by the DDOs in the TDS/TCS Statement have been observed. Reporting of incorrect BINs and corresponding amount in TDS statement will lead to mismatch with the respective amount as reported in the Form No. 24G. In this situation, the corresponding deductees may not get credit of the TDS/TCS. Therefore, the BIN as disseminated by the respective PAO should be reported correctly along with the corresponding amount in the TDS/TCS Statement filed by the DDOs.

(ii) In a number of cases, one distinct DDO has been found to be reported by more than one AO in the Form No. 24G for the same form type of TDS statement which is not a valid scenario. The DDOs and respective AOs are advised to reconcile the issue and one DDO should be mapped to one AO only for a particular form type for a particular month.

28. What are the duties of PAOs/DTOs/CDDOs?

i. To apply for AIN with jurisdictional TDS office. AIN application can be downloaded from TIN site.
ii. To obtain correct TAN from the reporting DDOs.
iii. To file Form No. 24G (in CD, DVD, Pen Drive), within 10 days from the end of the month, electronically either at TIN-FC or by direct online upload at TIN website.
iv. To track status of the filed Form No. 24G through TIN website.
v. To download Book Identification Number (BIN) generated on the basis of 24G statement.
vi. To disseminate BIN to the respective DDOs.

worksaccounts.com

29. What are the duties of DDOs?

i. To provide correct TAN to their PAOs/DTOs/CDDOs to whom the DDO/Deductor reports the tax so deducted & who is responsible for crediting such sum to the credit of the Central Government.
ii. To report to PAOs/DTOs/CDDOs, the details of tax deducted and credited to the Central Government account through book adjustment.
iii. To quote BIN in the quarterly TDS/TCS Statement (24Q, 26Q, etc) for the tax deducted and credited through book adjustment.
iv. Filing of TDS/TCS statement (24Q, 26Q etc) within the due date.
v. To download Form 16/26A from TRACES website (www.tdscpc.gov.in) and timely issuance of the same to the deductees.

30. What are the consequences of non-quoting of BIN details in quarterly TDS/TCS statement?

(a) BIN details and amount of TDS reported in the quarterly TDS/TCS Statement filed by the DDO will be matched with the details filed in Form No.24G filed by the PAO for verification purpose.
(b) Any wrong information reported by the DDOs in TDS/TCS Statement may lead to mismatch due to which credit to the respective deductee will not be available in the deductee's Form 26AS.
(c) Further details are available at TIN website www.tin-nsdl.com and ITD website www.incometaxindia.gov.in.

31. What is the format of Form 16/16A to be issued to the deductees?

It is mandatory to download and generate the Form 16/16A from the TRACES portal only. Deductor is allowed to issue manually only part _B' of Form 16 for salary details.

32. Is there any scenario where the DDO is also required to obtain the AIN?

Yes, if the deductor is in the capacity of CDDO and directly reports tax deduction through transfer voucher to State AG, in that case CDDO is required to obtain the AIN and file 24G for the respective book adjustment entries and then also required to file the TDS/TCS statement as a TAN holder.
For example in the case of Executive Engineer in state Government who are making payments to the contractors after deducting the TDS/TCS through cheque are liable to file Form 26Q for reporting such TDS transactions. They will be required to obtain the AIN and file form 24G for monthly reporting of these book adjustment entries and file quarterly TDS statements as TAN holder by quoting the corresponding BINs.

***

worksaccounts.com

ANNEXURE V

"Person Responsible for filing Form No. 24G in case of State Govt. Departments"

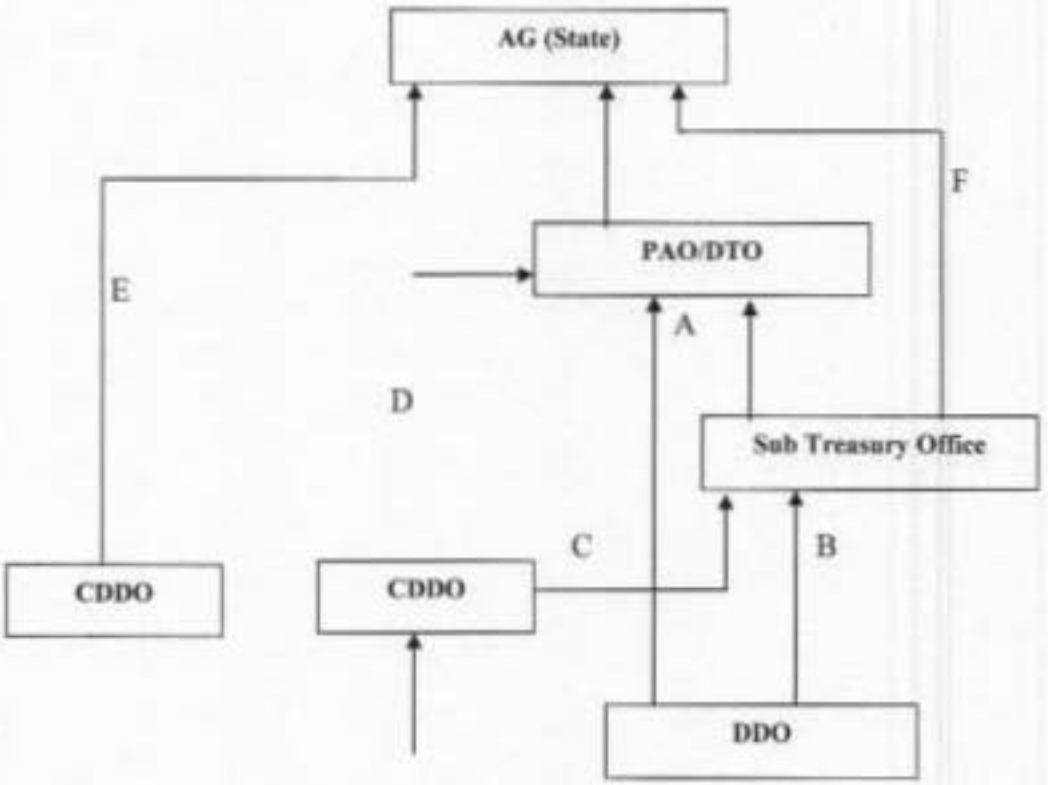

Type of Reporting of Book Entry	Person Responsible (AIN holder) for filing 24G.
A	PAO / DTO
B	PAO / DTO
C	PAO / DTO
D	PAO / DTO
E	CDDO
F	STO

AG	Accountant General
PAO	Pay & Accounts Officer
DTO	District Treasury Office
STO	Sub Treasury Office
DDO	Drawing & Disbursing Officer
CDDO	Cheque Drawing & Disbursing Officer

worksaccounts.com

ANNEXURE VI

POINT NO.4.9 OF DRAFT CIRCULAR OF DEDUCTION OF TAX AT SOURCE FROM SALARIES U/S 192 OF THE INCOME TAX ACT, 1961 – FINANCIAL YEAR 2015-16- PROCEDURE OF PREPARATION OF QUARTERLY STATEMENT OF DEDUCTION OF TAX UNDER SECTION 200(3) OF THE ACT

1. Quarterly e-TDS statement/return should be prepared by Deductor/DDO as per the data structure (File Format) prescribed by the DIT (Systems), Delhi which is available on TIN website www.tin-nsdl.com. Deductor/DDO can prepare e-TDS statement/return either by using in-house facilities, third party software or by using Return Preparation Utility (RPU) developed by NSDL e-Governance Infrastructure Limited (NSDL), which is freely downloadable from the TIN website.

After preparation of e-TDS statement/return, the Deductor/DDO is required to validate the same by using the File Validation Utility (FVU) which is freely available on TIN website.

2. Procedure of furnishing of e-TDS statement/return at TIN Facilitation Centres (TIN-FCs):

Once file is validated through FVU, _.fvu file' is generated. Copy of this _.fvu file' in CD/DVD/Pen Drive along with physical Form 27A duly filled and signed by the Deductor/DDO or by the person authorized by the Deductor/DDO, to be furnished at TIN-FC, an acknowledgement containing a unique 15 digit token number is provided to the Deductor/DDO. Deductor/DDO can view the status of e-TDS statement/return on TIN website.

Only one regular e-TDS statement/return for a _FY-Quarter-TAN-Form' can be submitted.

2.1 Correction in e-TDS statements/returns:

2.1.1 CPC-TDS portal (www.tdscpc.gov.in) has also introduced online correction of statements whereby personal information, PAN correction, add/update of challan information, add/update of salary detail, add/update/movement of deductee row etc. can be done in the statements filed by the deductors, **with or without the digital signatures**. For further details, kindly refer the matrix below:

	Default Summary View	Personal Information	Challan Correction (Unmatched, Matched Deductee + Deductee Movement	PAN Correction (Annex.I)	PAN Correction (Annex. II)	Add Challan to statement	Interest, Levy Payment	Modify/ Add deductee rows	Delete/Add Salary Deducted Rows
Online Correction (with digital signature, 2013-14 onwards)	Y	Y	Y	Y	Y	Y	Y	Y	Y
Online Correction (with digital signature, prior to 2013-14 onwards)	Y	Y	Y	N	N	Y	Y	N	N
Online Correction (without digital signature, 2013-14 onwards)	Y	N	Y	N	N	Y	Y	N	N

worksaccounts.com

Online Correction (withoudigital signature, prior to 2013-14 onwards)	Y	N	Y	N	N	Y	Y	N	N

For more information, deductors are advised to refer to e-tutorials/FAQs available on TRACES portal. Online correction entails no charges and does away with the requirement of downloading conso file and visiting TIN-FCs.

2.1.2 With effect from 1st January, 2015, TRACES will be providing a correction window of 7 days from date of processing at CPC-TDS (generally 2 days after date of filing of statement). This facility will enable the filer to correct PAN errors and challan mismatch cases identified by CPC-TDS and avoiding of issuance of demand notices. Therefore, deductors are advised to check the processing status promptly so as to utilize this facility.

2.1.3 Deductor/DDO can also file a correction e-TDS statement for any modification in the e-TDS statement. Correction statement can be prepared by using the TDS Consolidated file that is available at TRACES (www.tdscpc.gov.in). Validation of correction statement is in line with regular e-TDS statement, physical Form 27A duly signed and Statement Statistical Report at TIN-FC. On successful acceptance of correction e-TDS statement at the TIN-FC, an acknowledgement containing a unique 15 digit token no. is provided to the Deductor/DDO. Deductor/DDO can view the status of e-TDS statement on TRACES website.

3. Procedure of preparation and furnishing of paper TDS statement/return at TIN-Facilitation Centres (TIN-FCs):

All statement/return in Form 24Q are required to be furnished in computer media except in case where the number of deductee records are equal to or less than 20. Paper statement/return duly filled and signed by the Deductor/DDO can be furnished at TIN-FC. On successful acceptance of paper statement/return at the TIN-FC, an acknowledgment containing a unique 15 digit token no. is provided to the Deductor/DDO. Deductor/DDO can view the status of paper statement/return on TIN website. No charges are applicable for paper TDS statement/return.

3.1 Correction in paper statements/returns:

The physical TDS statement/return is to be filed again in case of any correction to a physical TDS statement/return accepted at TIN. The deductor will submit the duly filled and signed physical TDS statement/return along with a copy of provisional receipt of regular paper statement/return at TIN-FC. On successful acceptance of correction paper statement/return at the TIN-FC, an acknowledgement containing a unique 15 digit token number is provided to the Deductor/DDO. Deductor/DDO can view the status of paper statement/return on TIN website.

4. **Procedure of furnishing of e-TDS statement/return online at TIN website:** Deductor/DDO is required to procure Digital Signature Certificate (DSC) for online upload of e-TDS statement/return. After registration on TIN website, an authorization letter by the Deductor/DDO should be provided on the letter head of the organisation to NSDL. Once application is approved by NSDL, user ID is created and intimated to Deductor/DDO on their registered email ID provided at the time of registration. Preparation and validation of e-TDS statement is in line with regular e-TDS statement/return (submitted at TIN-FC).Deductor/DDO can login with its user ID and DSSC and

worksaccounts.com

upload the validated e-TDS file (.fvu file) generated by the FVU to the TIN website. On successful acceptance of e-TDS statement/return at TIN, an acknowledgement containing a unique 15 digit token no. and 8 digit receipt number is generated and displayed. There is no need to submit physical form 27A in online upload. Deductor/DDO can view the status of e-TDS statement/return on TIN website.

No charges are applicable for online upload of e-TDS statement/return.

4.1 Correction of e-TDS statement/return online at TIN website:
Deductor/DDO can file a correction e-TDS statement/return for any modification in e-TDS statement/return accepted at TIN central system. Correction statement/return can be prepared by using the TDS consolidated file only, available at the CPC-TDS portal www.tdscpc.gov.in through TAN registration. Preparation and validation of e-TDS statement is in line with regular e-TDS statement/return (submitted at TIN-FC) Deductor/DDO can login with its user ID and DSC and upload the validated e-TDS file (.fvu file) generated by the FVU to the TIN website. On successful acceptance of correction e-TDS statement/return at TIN, an acknowledgement containing a unique 15 digit token number is generated and displayed. There is no need to submit copy of provisional receipt of regular e-TDS statement/return, physical Form 27A and SSR in online upload. Deductor/DDO can view the status of e-TDS statement/return on TIN website.

5. For FAQs and further details, Deductors/DDOs are advised to log on website www.tin- nsdl.com

****

worksaccounts.com

ANNEXURE-VII

MINISTRY OF FINANCE
(Department of Economic Affairs)
(ECB & PR Division)
NOTIFICATION
New Delhi, the 22nd December, 2003

F.No. 5/7/2003-ECB &PR- The government approved on 23rd August, 2003 the proposal to implement the budget announcement of 2003-04 relating to introducing a new restructured defined contribution pension system for new entrants to Central Government service, except to Armed Forces, in the first stage, replacing the existing system of defined benefit pension system.

i. The system would be mandatory for all new recruits to the Central Government service from 1st of January 2004 (except the armed forces in the first stage). The monthly contribution would be 10 percent of the salary and DA to be paid by the employee and matched by the Central government. However, there will be no contribution form the Government in respect of individuals who are not Government employees. The contribution and investment returns would be deposited in a non-withdrawable pension tier-I account. The existing provisions of defined benefit pension and GPF would not be available to the new recruits in the Central Government service.

ii. In addition to the above pension account, each individual may also have a voluntary tier-II withdrawable account at his option. This option is given as GPF will be withdrawn for new recruits in Central government service. Government will make no contribution into this account. These assets would be managed through exactly the above procedures. However, the employee would be free to withdraw part or all of the _second tier' of his money anytime. This withdrawable account does not constitute pension investment, and would attract no special tax treatment.

iii. Individuals can normally exit at or after age 60 years for tier-I of the pension system. At the exit the individual would be mandatorily required to invest 40 percent of pension wealth to purchase an annuity (from an IRDA- regulated life insurance company). In case of Government employees the annuity should provide for pension for the lifetime of the employee and his dependent parents and his spouse at the time of retirement. The individual would receive a lump-sum of the remaining pension wealth, which he would be free to utilize in any manner. Individuals would have the flexibility to leave the pension system prior to age 60. However, in this case, the mandatory annuitisation would be 80% of the pension wealth.

Architecture of the new Pension System

(i) It will have a central record keeping and accounting (CRA) infrastructure, several pension fund managers (PFMs) to offer three categories of schemes viz. option A, B and C.

(ii) The participating entities (PFMs and CRA) would give out easily understood information about past performance, so that the individual would be able to make informed choices about which scheme to choose.

2. The effective date for operationalization of the new pension system shall be form 1st of January, 2004.

U.K. SINHA, Jt. Secy.

worksaccounts.com

ANNEXURE-VIII

MINISTRY OF FINANCE
Department of Revenue
(Central Board of Direct Taxes)
Notification

New Delhi, the 24th November, 2000

INCOME- TAX

S.O.1048 (E) - In exercise of the powers conferred by sub-clause (i) of clause (18) of Section 10 of the Income-tax Act, 1961 (43 of 1961), the Central Government, hereby specifies the gallantry awards for the purposes of the said Section, mentioned in column 2 of the table below awarded in the circumstances as mentioned in corresponding column 3 thereof:-

Table

Sl. No.	Name of gallantry award	Circumstances for eligibility
(1)	(2)	(3)
1.	Ashok Chakra	When awarded to Civilians for gallantry
2.	Kirti Chakra	- do -
3.	Shaurya Chakra	- do -
4.	SarvottanJeevanRaksha Padak	When awarded to Civilians for bravery displayed by them in life saving acts.
5.	UttamJeevanRaksha Medal	- do -
6.	JeevanRakshaPadak	- do -
7.	President's Police Medal for gallantry	When awarded for acts of exceptional courage displayed by members of police forces, Central police or security forces and certified to this effect by the head of the department concerned
8.	Police Medal for Gallantry	- do -
9.	Sena Medal or	When awarded for acts of courage conspicuous gallantry and supported by certificate issued to this effect by relevant service headquarters.
10.	NaoSena Medal	- do -
11.	VayuSena Medal	- do –
12.	Fire Services Medal for Gallantry	When awarded for acts of courage or conspicuous gallantry and supported by certificate issued to this effect by

worksaccounts.com

	the last Head of Department.
13. President's Police & Fire Services Medal for Gallantry	-do-
14. President's Fire Services Medal for Gallantry	-do-
15. President's Home Guards and Civil Defence Medal for Gallantry	-do-
16. Home Guard and Civil Defence Medal for Gallantry	-do-

(Notification no. 1156/F.No. 142/29/99-TPL)

T.K. SHAH
Director

worksaccounts.com

ANNEXURE IX

MINISTRY OF FINANCE
Department of Revenue
Central Board of Direct Taxes

New Delhi, the 29th January,2001

S.O.81(E)- In exercise of the powers conferred by sub-clause (i) of clause (18) of Section 10 of the Income –tax Act, 1961 (43 of 1961)), the Central Government, hereby specifies the gallantry awards for the purposes of the said Section and for that purpose makes the following amendment in the notification of the Government of India in the Ministry of Finance, Department of Revenue (Central Board of Direct Taxes) number S.O.1048(E), dated the 24th November 2000, namely:-

In the said notification, in the Table, against serial numbers 1,2 and 3 under column (3) relating to –Circumstances for eligibility **the words** –to civilians shall be omitted.

(Notification No.22/F.No.142/29/99-TPL)

T.K. SHAH
Director

worksaccounts.com

ANNEXURE-X

FORM NO. 10BA
(See rule 11B)
DECLARATION TO BE FILED BY THE ASSESSEE
CLAIMING DEDUCTION U/S 80 GG

I/We.....
.....

(Name of the assessee with permanent account number or Aadhar number) do hereby certify that during the previous Year.....I/We had occupied the premise.....(full address of the premise) for the purpose of my/our own residence for a period of.....months and have paid Rs. ..... In cash/through crossed cheque, bank draft towards payment of rent to Shri/Ms/M/s..... (name and complete address of the landlord).

It is further certified that no other residential accommodation is owned by

a) me/my spouse/my minor child/our family (in case the assessee is HUF), at .....where I/we ordinarily reside/perform duties of officer or employment or carry on business or profession, or
b) me/us at any other place, being accommodation in my occupation, the value of which is to be determined u/s 23(2)(a)(i) of u/s 23(2)(b).

****

worksaccounts.com